Products · Planning · Prices

emcovent quick selection catalogue 2017/18

Ventilation units
for floor installation, for facades and sound-insulated

Price list is valid from 01.04.2017

emco Klima creates atmosphere.

emcovent

emcovent price list 2017/18
All prices are in EUROS and do not include VAT.
This price list supersedes all previous information regarding prices and conditions.
We reserve the right to change prices and technical details.
Please refer to our general conditions of business, delivery and payment.
Product orders with a value of 400,- Euros or less are subject to a processing fee of 100,- Euros.

EMCO

Contents

emcovent

emcovent

Ventilation units
for floor installation

Sound-insulated
ventilation units

Facade ventilation units

emco klima was established in 1972, manufacturing a range of sturdy diffusers that were suitable for requirements at that time. Specific developments for different air ducting systems, flexibility in terms of devising bespoke solutions and on-time delivery are factors that have allowed emco klima to build a relationship of trust with its specialist partners.

Today, emco provides a comprehensive range of air and water ducting systems, and services such as calculations involving proprietary computer programs and laboratory testing. Comfort and well-being are fundamental to ensuring efficiency, safety and good health.

Any air conditioning solution for enclosed spaces within residential and office buildings and industrial premises requires a coordinated climate control concept that is geared to the needs of the users concerned and the conditions that are specific to the building in question.

Decentralised ventilation systems provide architects and planners with a whole range of options for combining centralised and decentralised air conditioning systems.

Innovative control technology makes it possible to control the various systems in a coordinated manner.

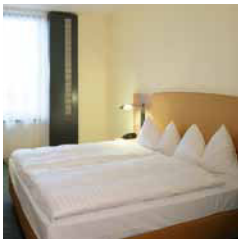

Contents

emcovent basic information · system benefits

Why decentralised air conditioning?

The primary aim of erecting or making changes to the structure of an office building is to enable more economical use of the space and improve the working environment it houses.
Creating optimum working conditions means more productive workers with a higher sense of job satisfaction. Establishing an environment that is truly comfortable to work in requires a whole range of different aspects to be considered, one of which is good visibility. People find natural light more pleasant than its artificial counterpart, which is why today's office buildings are increasingly opting to be surrounded by glass facades. Not only does this ensure that sufficient amounts of daylight can permeate the building, but it also allows more solar radiation to penetrate, resulting in a larger thermal load within the building space. On top of this, these buildings contain computers, screens, printers and other equipment that heat the air around them, further contributing to the thermal load.

As the thermal situation has changed, however, requirements in terms of comfort have risen at the same time. The only way to achieve a pleasant indoor climate is to ensure that temperatures, air flows, air quality and acoustic levels are all exactly right for the working environment in question. As a result, ventilation, cooling and heating solutions for room air have become indispensable. Changes in the impact exerted by the outdoors (for example, by noise from the street and air pollution) mean that natural ventilation by way of windows simply cannot be used in many cases. The result is that mechanical ventilation methods or partial/full air conditioning systems have become the answer in buildings like the ones being discussed here.
One of the key tasks of these systems is to feed in air that it has conditioned. Depending on the requirements of the application, this can take placed using either centralised or decentralised methods.

Decentralised units are suitable for a broad range of applications within the context of modern building services engineering. The fact that there are no duct lines means that there is no need to have large supply shafts running to the individual floors or additional space in the suspended ceiling. The compact design of decentralised ventilation units, coupled with the way they can be intelligently integrated into the facade or the floor area in the vicinity of the facade, frees up

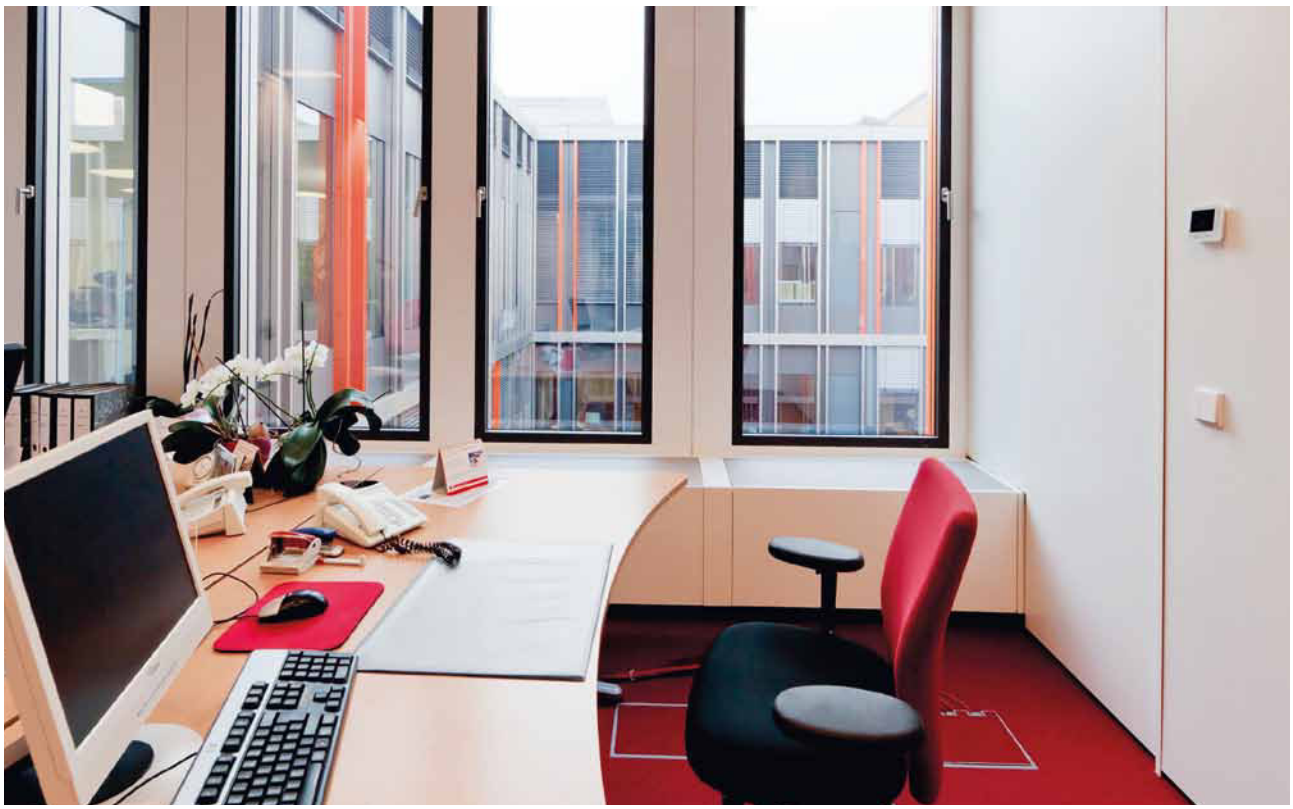

space that presents additional rental opportunities. The low-loss method of transporting heat or cold via a 2-pipe or 4-pipe system, plus a customised control option, afford huge fossil fuel savings. What is more, CO_2 emissions are reduced to a minimum and costs are kept low.

Decentralised ventilation systems bearing the emcovent brand open up countless opportunities in these applications. A flexible design concept makes the units suitable for use in facades, breastwork or floor areas in the vicinity of the facade. They can also be tailored specifically to the structural conditions in question. Used in conjunction with emcocool chilled ceiling systems or emcotherm convectors, it is possible to absorb high levels of caloric output.
All of emco's components are available for its entire range of products, whether the application involves air (either intake or discharge) or water as a medium.
Comparing air conditioning methods that use centralised and decentralised ventilation systems reveals that both options have their benefits and drawbacks. Ultimately, it is the structural requirements of the building and how it is to be used, plus the specific wishes of the building owner, that will determine which of the two systems is the more appropriate option. However, here are some criteria that can help this decision along:

Space requirements:
A large air volume flow is essential for covering conditioned air requirements for an entire building from a central point. This means that the components used in the central system and, accordingly, the central control area must be appropriately dimensioned. Conditioned air is distributed via a branched duct system that supplies air to the various floors by way of vertical shafts and distributes it to the individual rooms, and should ideally be installed in a suspended ceiling. It is possible to make use of the space that would otherwise be lost through this system by incorporating decentralised ventilation units into the planning process, as this allows a fresh air supply to be provided directly via the facade.

Fire protection:
As far as fire protection is concerned, constructing a centralised ventilation system requires more work than a decentralised one. Centralised air conditioning involves a complex duct system that distributes air via multiple fire zones. This means putting in place a relatively large number of fire protection measures, which will have an impact on the air duct. Because decentralised air conditioning units draw the required air directly from the adjacent facade, there is no need for a complicated air distribution system within the building.

Control:
The flexible, user-specific control methods that decentralised ventilation systems offer represent another of their benefits. Room users can control each unit, or group of units in a control circuit, individually as they require. Setting up a control system like this does not involve a great deal of work. Additionally, because only those units whose energy is actually needed are controlled during operation, primary energy consumption is reduced.

Head quarter Allianz, Frankfurt (Germany)

Energy requirements:
When viewed in relation to fan efficiency, a comparison of energy requirements reveals that centralised systems are still more efficient even if other systems use higher-efficiency EC fans. However, the low pressure losses that decentralised systems offer, and their low-loss energy transport involving water as an energy carrier, compensates for their poorer efficiency levels in many cases.

Acoustics
Sound causes vibrations in the air, which alternately compress and expand. These changes in pressure overlay the existing air pressure and reproduce sinusoidally in the air.
If these pressure variations reach the human ear, the air pressure waves are converted into mechanical vibrations by the ear drums. The hearing process has been started. The human ear perceives only an airborne sound, whereby the following two parameters are decisive:

a. Sound Pressure
b. Frequency

1. Sound pressure
Sound pressure is the pressure change in the air which is generated by an acoustic source. These variations in pressure are measured in N/m² and identified with p.
Sound pressure represents a gauge for volume. It depends on the distance between the acoustic source and the measurement point as well as the condition of the room. Sound pressure as a pure parameter is not suited to calculate sound propagation. The sound power of the acoustic source must be determined.

2. Sound power
Sound power is energy emitted from an acoustic source and transformed into sound. Sound power is fed to the air in the form of pressure fluctuations. Sound power is a parameter that cannot be measured directly.
It is determined when the acoustic pressure surrounds the acoustic source. Sound power is thus a parameter not dependent upon the room and distance. It will be used for all further calculations, and will be specified in watts [W].

For practical reasons, non-dimensional operational figures are adpoted, which go back to A.G. Bell.

3. Sound pressure level
The logarithmic ratio of sound pressure p to the reference value p_o is identified as sound pressure level L_p and is measured in decibels [dB].

$$L_p = 10 \log \left(\frac{p}{p_0}\right)^2 \text{ in dB}$$

The reference value is $p_0 = 2 * 10^{-5}$ N/m² and is the minimum sound power that humans perceive. It is identified as the auditory threshold. The acoustic range (auditory threshold – pain threshold) therefore lies between 0 and 120 dB.

4. Sound power level
The logarithmic ratio of sound power (W) to reference value (W_0) is identified as the sound power level and is also measured in decibels [dB].

$$L_W = 10 \log \frac{W}{W_0} \text{ in dB}$$

The reference value is $W_0 = 10^{-12}$ W.
Although the sound pressure level and sound power levels are both expressed in decibels (dB), they are two different things. The sound power level is the sound generated at the source and the sound pressure level is a sound perceived at a certain distance from the sound source. Thus the sound power level is generally higher than the sound pressure level.

5. Frequency weighting
When the frequencies vary, humans perceive equal acoustic pressure levels differently. Generally an acoustic pressure level at a low frequency is perceived to be softer and less disruptive than at a high frequency. In order to accommodate this subjective sense, objectively measured acoustic pressure levels are adapted to the perception of volume. This is referred to as weighting acoustic pressure. The weighting is done as follows:

A certain value from the gauged sound pressure level is subtracted from the frequencies to which humans are less sensitive, at the same time a certain value is added to other frequency ranges. The a-weighting has established itself as the primary type of weighting. Here the statement is a singular designation, referred to as an A-weighted sound pressure level or A-weighted sound power level. It is indicated in dB(A).

6. Sound level addition
If there are several acoustic sources, the respective energies (sound power level) and sound intensity (sound pressure level) must be added to make a total sound level. The same principles are valid for both the sound power level and the sound pressure level.
The following relation is valid for multiple acoustic sources with the same level:

$$L_{ges} = L_1 + 10 * \log n \text{ [dB]}$$

In this equation, **n** is the number of acoustic sources. The function is illustrated in graph 1.
If there are acoustic sources with varying levels, a level increase of ΔL is added to the higher level, the increase being dependent on the level difference and calculated according to the following equation:

$$\Delta L = 10 * \log (1 + 10^{(L_1 - L_2/10)})$$

This correlation is also valid for $L_2 > L_1$ and illustrated in graph 2.

If there are several acoustic sources with varying levels, the addition should be done in steps. First the sum level should be calculated from two levels. The sum level is then added to a third and so on. Each individual addition is done according to the equation stated or the graph. The order of the calculation is not important, as the result is always the same.

Thus the following conclusion can be made:
The addition of two sound sources with the same level results in an increase of 3 dB.
If the level difference is greater than 10 dB, there is practically no addition. Formally there is an increase of 0.4 dB, but this is not taken into consideration because the human ear can only perceive changes of at least 3 dB.

Chart 1: Increase in level with equally loud acoustic sources

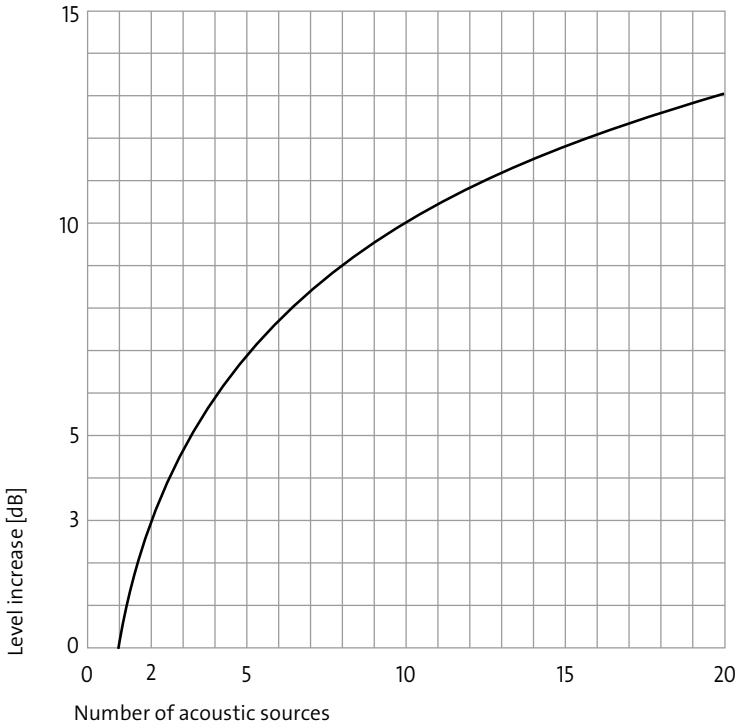

Chart 2: Increase in level with unequally loud acoustic sources

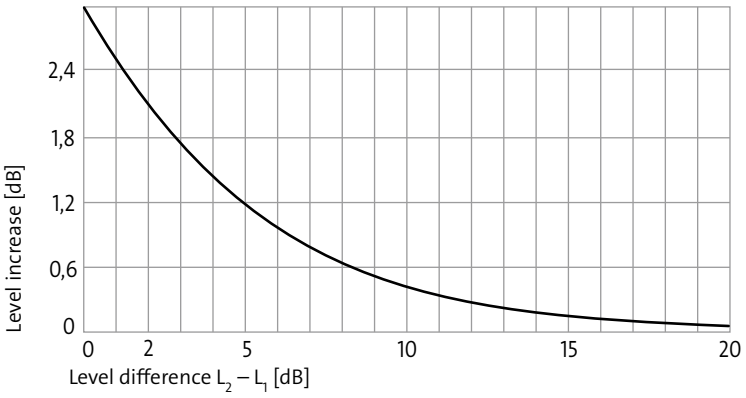

7. Determining the sound pressure level in the room

To determine the sound pressure level in a room, the acoustic source and its sound power level must be known. The sound power level generated and emitted by an acoustic source creates a certain sound pressure level, which is independent of the distance to the sound's source, its direction gain and the room absorption.
This leads to a overlapping of the direct and diffuse acoustic field and is described with the following equation:

$$L_p = L_W + 10 \log \left(\frac{Q}{4\pi r^2} + \frac{4}{A} \right) \text{ in dB}$$

Q: directivity factor
r: distance from the acoustic source in m
A: absorption area in m² Sabin

Differentiation is made between the following directivity factors:

1 In the middle of the room
2 In the middle of the wall
3 In the middle of the room angle
4 In the corner of the room

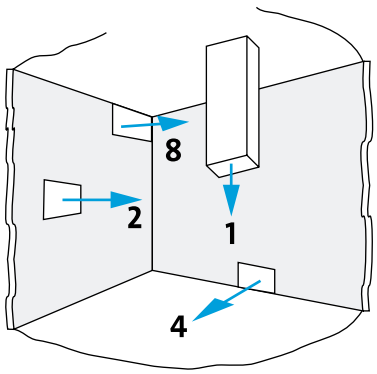

The value of the directivity factor is between 1 and 8 and is dependent on the angular distribution.

For practical calculation, set the directivity factor – independent of all other parameters – to 8 and the angular distribution to 0°. For all other cases, use a directivity factor of 4.
Absorption area: the equivalent absorption area can be determined from reverberation time T.

$$A = 0.163 \frac{V}{T} \text{ in m}^2$$

V: Space (volume) in m³
T: Reverberation Time s

Reverberation time can be determined experimentally. During planning, reverberation time can be determined according to VDI 2081 using the following chart.

Type of room	Example	Average reverberation time [s]
Workspace	Single office	0.5
	Open-plan office	0.5
	Workshops	1.5
Assembly rooms	Concert halls. Opera houses	1.5
	Theaters. Cinemas.	1.0
	Conference rooms	1.0
Housing	Hotel rooms	0.5
Social rooms	Break rooms	0.5
Classrooms	Reading rooms	1.0
	Lecture halls	1.0
	Classrooms/seminar rooms	1.0
Hospital	Operating theatre (room)	2.0
	Patient rooms	1.0
	Spas and swimming pools	2.0
Public areas	Museums	1.5
	Restaurants	1.0
	Showrooms	1.0
Sport facilities	Gymnasiums. Swimming pools	2.0
Other	Radio and TV Studios	0.5
	Computer rooms	1.5

Chart: Reverberation time (from VDI 2081)

Indoor attenuation, subject to the absorption area, directivity and distance from the acoustic source can be seen in the following graph.

Absorption factor α
A wall which absorbs all incoming acoustic waves, has an absorption factor of $\alpha = 1$. The above mentioned α_m-values are the ratio of actual absorption to an ideally absorbing wall. They represent a average value.

Absorption area m² Sabin
This is the area which completely absorbs all sound waves. It is **not identical** with the **entire room area**.

Conversion graph sound power in sound pressure level

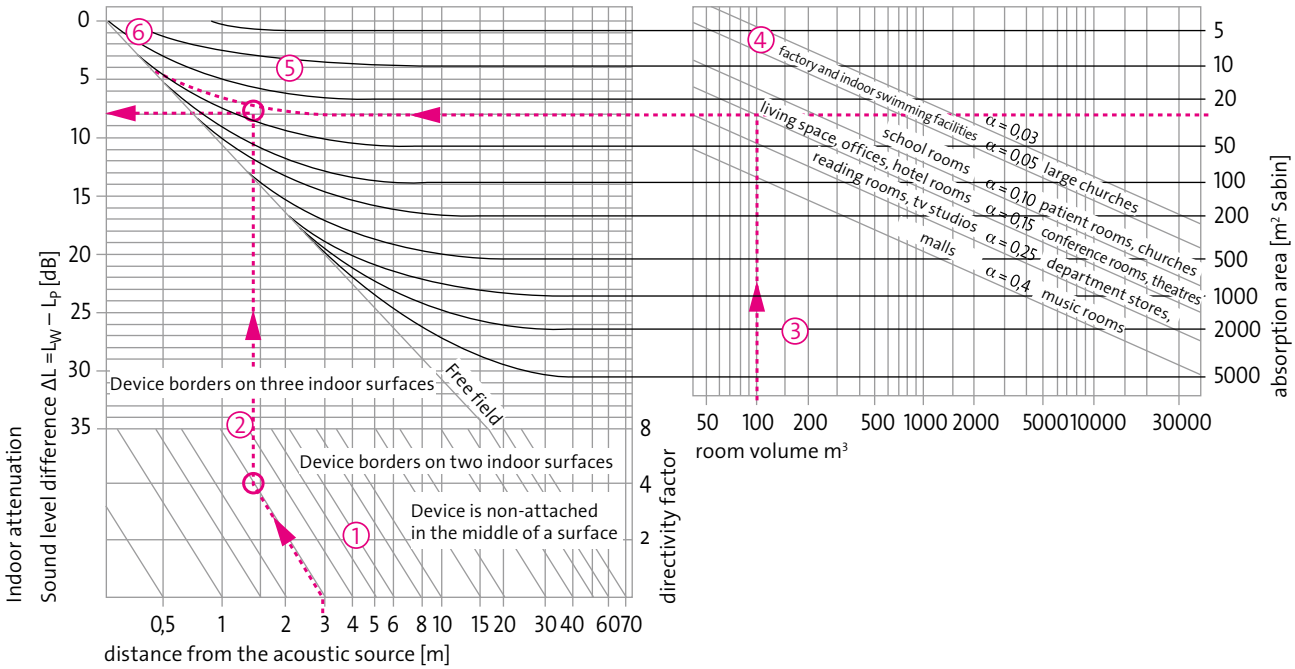

Example acoustics:

Fact: *Device with a sound pressure level of 40 dB(A) installed in a conference room with a volume of 100 m³*

Question: *How high is the sound pressure level at a distance of 3 m from the device?*

For practical reasons assume: *Directivity factor is 4*

1. *Starting at point ① follow the parallel line distance 3 m to the intersection point with the horizontal line of directivity factor 4 (point ②).*
2. *From there draw a perpendicular line upwards.*
3. *New start at point ③ Room volume 100 m³ (left side) then follow perpendicular line upwards to the intersection point ④ with the absorption factor line for conference rooms.*
4. *From this point, follow the both the subsidiary line of the left graph to intersection point ⑤*
5. *From point ⑤ follow the horizontal line to the ordinate, which results in a room attenuation of 8 dB (point ⑥).*

Thus the sound pressure level is $L_p = L_W - \Delta L$ = 40 dB(A) – 8 dB(A) = 32 dB(A)
This value of 8 dB(A) indoor attenuation is kept in mind when specifying the sound pressure level.

Building acoustics

1. Introduction

In general, building acoustic characteristics are concerned with the transmission of sound between two adjacent areas. They describe the sound-absorbing properties of a partition element (such as a door or a window) or a complete system (such as an external facade made of glass, concrete and installed decentralised ventilation modules). In the field of building acoustics, a distinction is made between airborne sound insulation and impact sound insulation. The latter has a less significant role to play in air conditioning technology, so here we will concentrate on explaining airborne sound insulation in more detail.

2. Building acoustic characteristics

The basis of all building acoustic characteristics is the sound pressure level difference between two areas. This describes the drop in level between an area transmitting sound (transmitting room) and an area receiving sound (receiving room). It is calculated thus:

$$D = L_{p1} - L_{p2}$$

Where:

L_{p1} = sound pressure level in the transmitting room

L_{p2} = sound pressure level in the receiving room

Other building acoustic characteristics are calculated based on the sound pressure level difference, which enable partition elements to be objectively assessed:

2.1 Standardised sound level

In order to be able to carry out an objective assessment of the sound-absorbing properties of a partition element, the acoustic properties of the receiving room (room attenuation) must be considered in order to obtain a neutral dimension for assessing the partition element. The central characteristic here is the standard sound level difference. It is calculated thus:

$$D_n = D + 10 * \log \left(\frac{A_0}{A}\right)$$

Where:

A = equivalent sound absorption area of the receiving room [m^2_{Sabin}]

A_0 = standard reference absorption area, $A_0 = 10\ m^2_{Sabin}$

If no analyses are carried out using measuring technology, the equivalent sound absorption area is calculated from the volume and reverberation time of the room (see Chapter 7 "Determining the sound pressure level in the room" on page 10).

2.2 Airborne sound reduction index

The airborne sound reduction index is based on the sound pressure level difference between adjacent areas too. Unlike the standard sound level difference, however, the standard reference absorption area is not used here; the cross-sectional area of the object under test within the partition element is used instead. The sound reduction index is calculated thus:

$$R_w = D + 10 * \log \left(\frac{S}{A}\right)$$

Where:

A = equivalent sound absorption area of the receiving room [m^2_{Sabin}]

S = cross-sectional area of the object under test [m^2]

In an actual building it is almost impossible to determine the airborne sound reduction index of an individual component within a complete system. It is therefore calculated using measuring technology in laboratories instead.

2.3 Structural sound reduction index

In contrast to the airborne sound reduction index R_W, the structural sound reduction index R_W' describes the sound-absorbing properties of a complete system, such as a partition wall with a door installed. The structural sound reduction index is calculated using a similar formula to the airborne sound reduction index. However, the values produced by the calculations of the different sound reduction values cannot usually be compared with one another.

3. Calculating a commonly used single number value

Analyses of building acoustic characteristics are carried out using measuring technology in an environment specifically intended for this purpose as standard. Such analyses are usually performed in third-octave bands in the range 100 Hz to 3150 Hz, with varying level differences resulting for each third-octave band analysed. For an initial estimation of the sound-absorbing properties, it is therefore common to specify a single number value, which is to be defined in the 500 Hz band in accordance with DIN EN ISO 717-1. The results of the measurements should be compared against a reference curve in order to calculate this single number value. The reference curve is moved in 1 dB increments until the sum of all lower deviations < 32 dB.

The point where the 500 Hz band intersects with the reference curve gives the single number value of the building acoustic characteristic being analysed (see figure on the right). In practice, this can lead to misunderstandings between the people involved in the process, since the values obtained using measuring technology will usually differ from those determined by moving the reference curve

4. Total sound reduction index of a partition element

It is usually of interest to know the total sound reduction index of a partition element. This partition element will normally be comprised of several individual components (partition wall with door, facade made of glass and concrete with openings for a decentralised ventilation module and so on). To calculate the total sound reduction index, the sound reduction indices of the partition wall and the individual sound reduction indices of the installed components are considered in relation to their cross-sectional areas:

$$R_{w,\,res} = -10\lg\left[\frac{1}{S_{ges}}\left(S_1 * 10^{\frac{-R_{w,1}}{10}} + S_2 * 10^{\frac{-R_{w,2}}{10}} + \ldots + S_n * 10^{\frac{-R_{w,n}}{10}}\right)\right]$$

S_{ent}: Area of the entire component [m²]

S_1 bis S_n: Areas of the individual elements of the component [m²]

$R_{w,1}$ bis $R_{w,n}$: assessed sound reduction indices of the individual elements of the component [m²]

Example calculation of a single number value (emcovent FLH, air flaps closed)

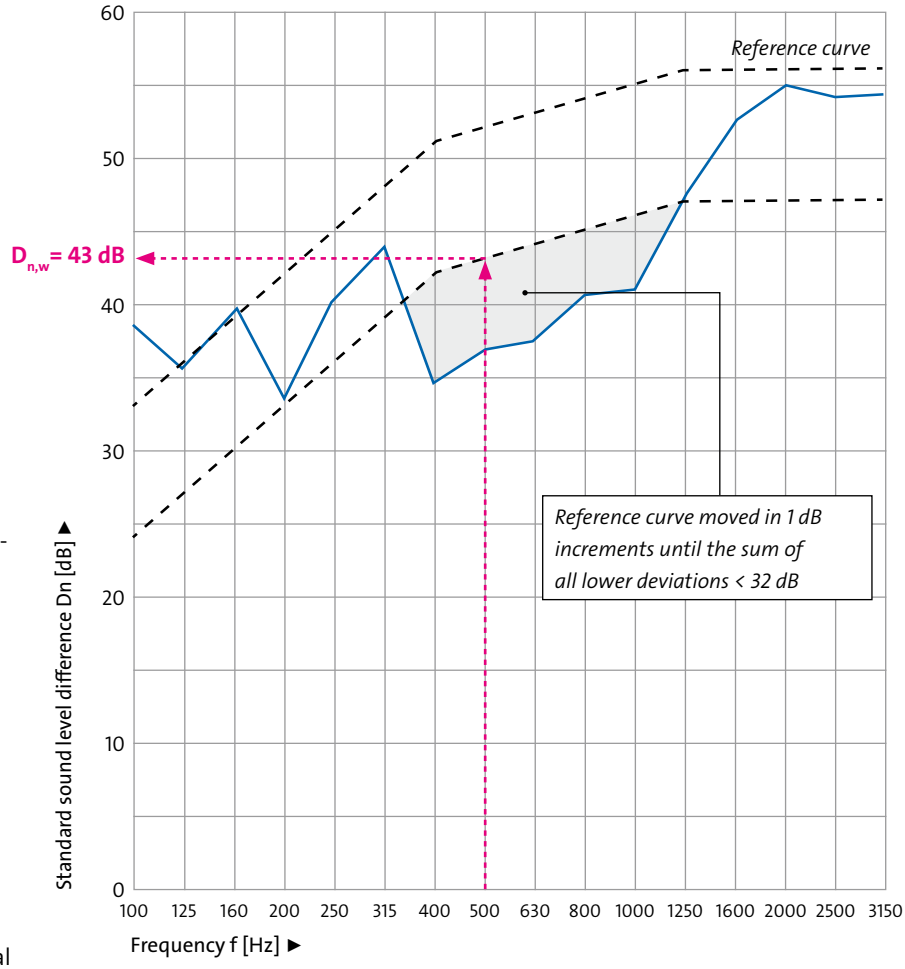

Frequency f [Hz]	Standard sound level difference D_n[dB]*
100	38.3
125	35.4
160	39.6
200	33.3
250	40.3
315	43.8
400	34.4
500	36.8
630	37.5
800	40.5
1000	40.9
1250	46.9
1600	52.3
2000	54.8
2500	54.0
3150	54.2

Single number value $D_{n,w}$ 500 Hz. 53 dB. *In acc. with DIN EN ISO 140-4

Contents

emcovent decentralised floor ventilation units models UZS · UZA · UZAS

Model UZS

Model UZA

Model UZAS

emcovent model UZS ventilation unit for floor installation.
Decentralised ventilation unit for floor installation, for heating, cooling and forced convection ventilation.

Description

Decentralised units are suitable for a broad range of applications within the context of modern building services engineering. In new buildings, their compact and innovative designs allow them to be highly adaptable for integration into the facade structure. Meanwhile, the restricted spaces that accompany renovation tasks in old buildings often make them the only solution when it comes to room ventilation.
The emcovent UZS has been designed for use in false floors. Its compact design and useful option of integration into the floor area enables buildings to incorporate floor-to-ceiling glass facades. A direct external air connection via the facade also makes it possible to do away with complicated networks of air ducts.
A 2-pipe or 4-pipe convector element ensures the temperature of the external air is controlled as necessary.
What is more, the low-noise addition of secondary air by means of an integrated secondary air fan unit means high thermal loads can be removed. Used in conjunction with a conventional floor convector (such as the emcotherm model KQKL), this model is able to increase the useful power supplied to the room several times over. The customisable, flexible control options enabled by the emcovent control units or an existing building management system make the emcovent UZS a particularly user-friendly and energy-efficient unit.
All components conform to VDI 6022.

Application areas

Decentralised floor ventilation units are ideally suited to areas with high demands in terms of room air quality and thermal comfort.

- Offices and administration rooms
- Business premises
- Reception areas and foyers
- Exhibition rooms
- Rooms requiring external air
- Rooms where windows cannot be opened
- Rooms whose appearance and layout should not be disturbed by heating components.

Product benefits

- Eurokonus valve connection for time-saving valve installation
- System for heating, cooling and ventilation
- High caloric output with low acoustic load
- Pleasant room climate thanks to air supply in the vicinity of the facade
- Load-bearing
- For use in false floors
- Can be adapted to suit the specific requirements of the building
- Infinitely adjustable control
- Low installation depth
- Energy-efficient EC fan

Connection to emcoMFC

The emcovent UZS models can be controlled using an emcoMFC series multifunction controller.
Accordingly, they are easy to integrate into the efficient emco comfort air conditioning system, which supports customisable programming.
In the context of project solutions, emco recommends the emcoMFC control system for this convector.

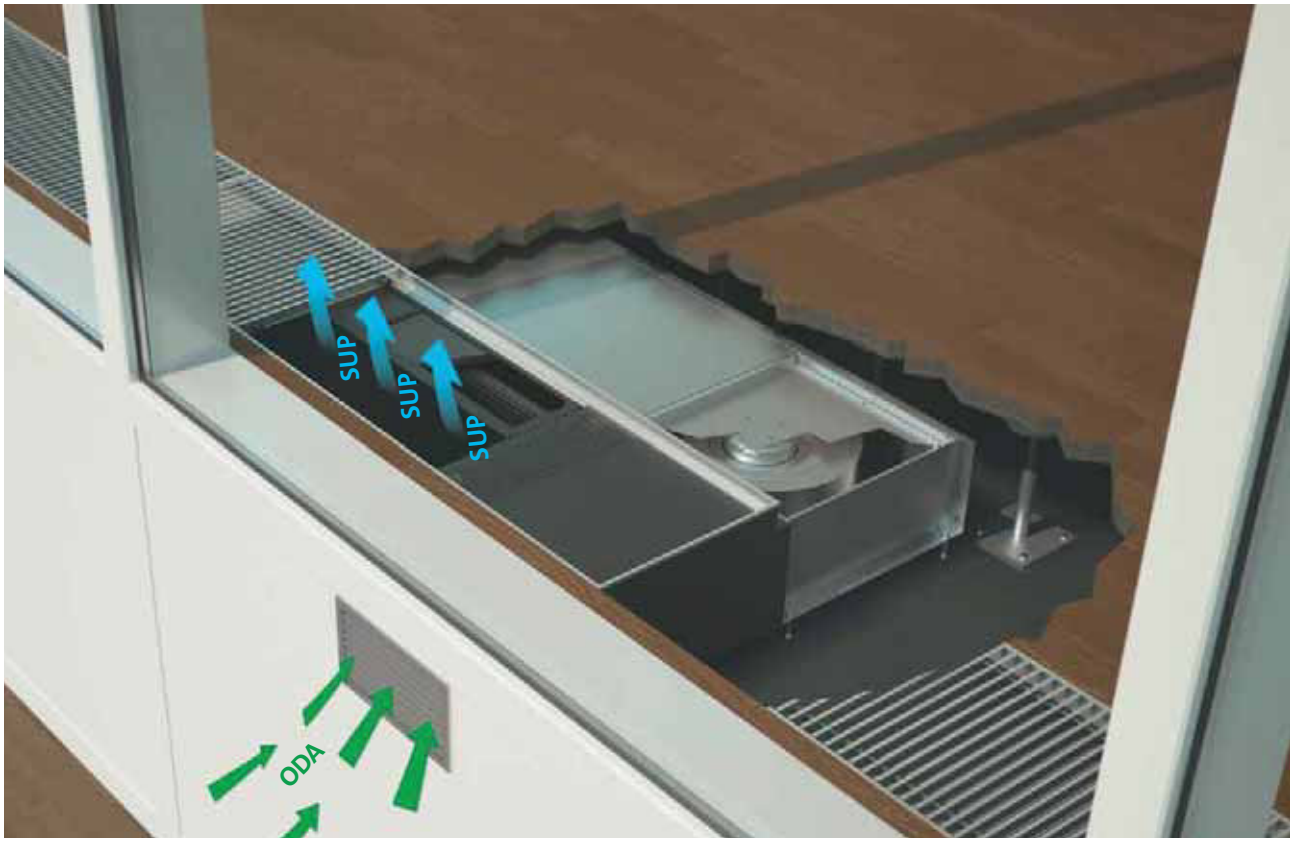

Method of operation

Outdoor air operation only:
The external air (ODA) is drawn in through an opening in the facade, by means of an EC radial fan that controls flow volume, and passes through a filter element (F7). The supply air opening is closed by a return spring motor when the unit is switched off (normal-ly closed). The energy-saving, flow volume-controlling EC fan units compensate for any pressure fluctuations at the facade. The air then reaches a sound absorption unit before flowing under a heat exchanger (available as a 2-pipe or 4-pipe system) and being heated or cooled. It can now be supplied to the room via the entire duct length in the vicinity of the facade.

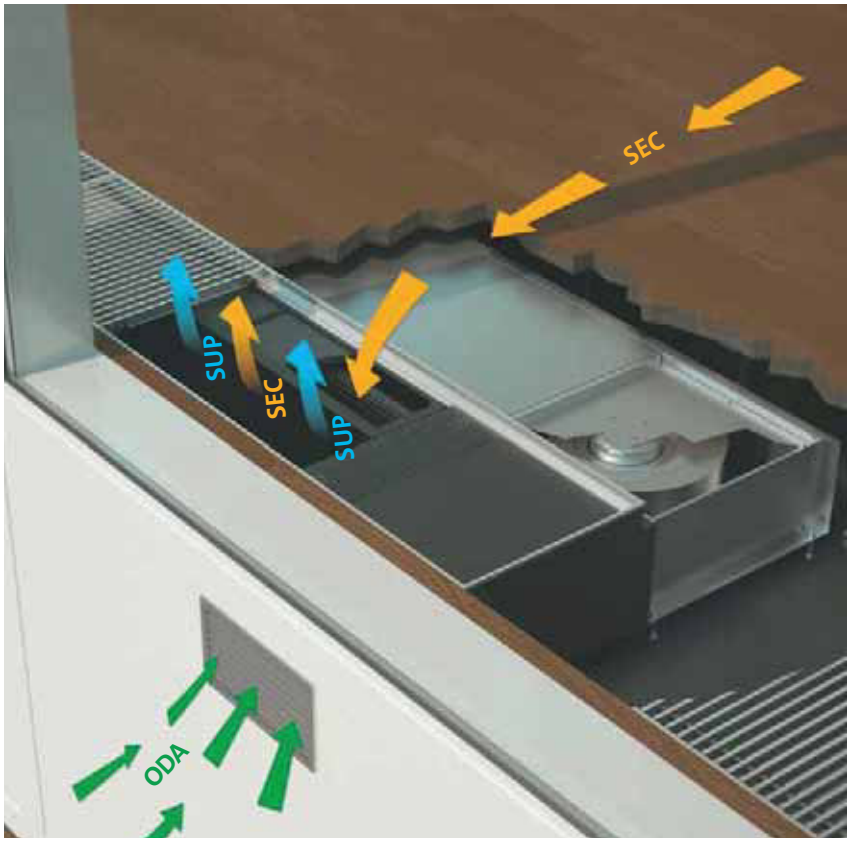

Mixed air operation only:
This type of operation involves a combination of outdoor air (ODA) and secondary air operation (SEC).
These two air volume flows are merged underneath the convector element. The mixture of room air and secondary air (SEC) increases the useful power of the unit several times over. The mixed air (MIA) is then adjusted to the required temperature by the convector element and supplied to the room in the vicinity of the facade.

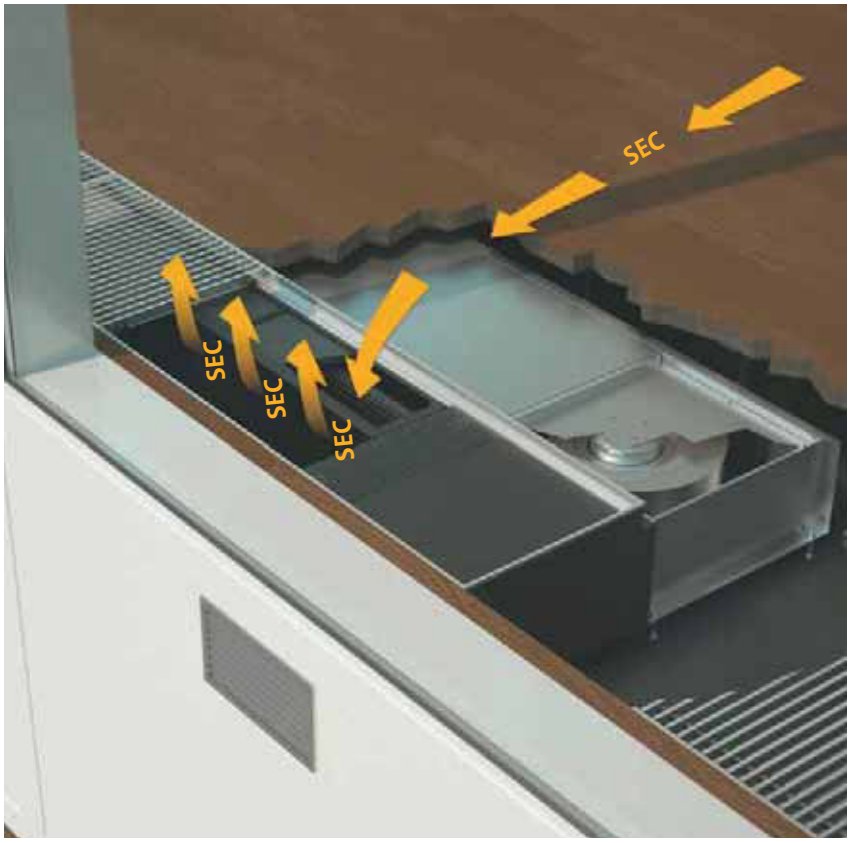

Secondary air operation only:
In the case of secondary air operation, the room air is drawn in by a crossflow fan at the room side, passes through the heat exchanger, and is fed into the room in the vicinity of the facade.

emcovent ventilation unit for floor installation, model UZS – configuration and component description

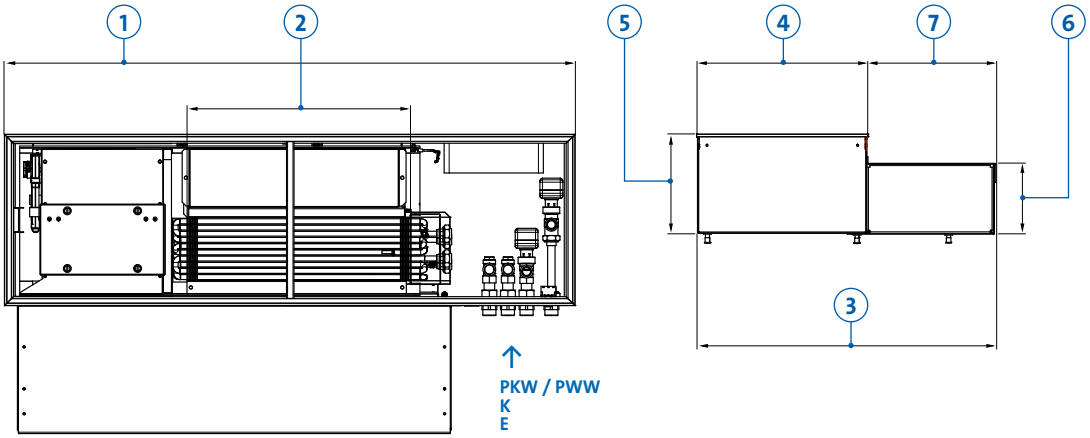

No.	Dimension	Value	Unit
	Size	**345**	–
1	Duct length	1150	mm
2	Ribbed convector length	451	mm
3	Width (total)	603	mm
4	Width (visible area)	345	mm
5	Height (total)	200	mm
6	Height (underneath floor)	143	mm
7	Width of sound insulating duct	258	mm

Dimensions and position of the external air connection can be individually adapted.

Key for connection options

PCW = pump cold water
PWW = pump warm water
C = condensate connection (if required)
E = electrical connection

Available as an option:
Preinstalled water connection
Water connections preinstalled at the factory are available as accessories for emcotherm floor convectors. The connection set consists of:

1. Thermostat valve
   Standard TVU-E or TVU-D
   (optional: TVU-V-E or TVU-V-D)
2. Thermoelectric actuator, model TS, 230 V (optional, subject to an additional charge: model TS, 24 V)
3. Shutoff return screw connection
4. Connections inside tray, fully piped and leading outward (connection ¾“ AG); testing for leaks

Benefits:

- Huge time savings during installation
- Dirt cannot get into the floor tray during installation as the tray is able to remain sealed
- The media and electrical connections are supplied outside of the floor tray
- Media connections are fully tested for leaks at the factory

Available as an option:
Ready-to-use electrical version
All electrical components are pre-wired at the factory and attached to the exterior of the tray by means of screw-in connectors. The customer can carry out wiring work outside the tray easily using the mating connectors supplied.

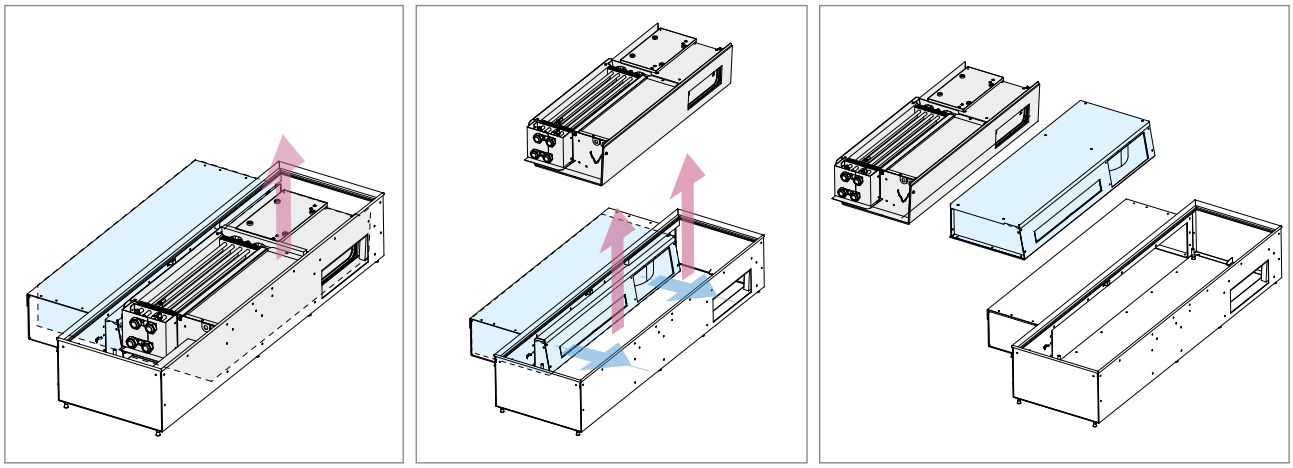

Schema of inspection option

emcovent UZS – inspection option

During the development of the emcovent UZA, ease of installation and maintenance was placed high on the agenda.
Filter units, actuators, damper registers and so on can be accessed with ease by removing the cover grid.
If required, maintenance can also be performed on the supply air fan units by removing the function modules via the cover grid.
What is more, it is not even necessary to disconnect the water-side connection, meaning that huge time savings can be made when draining the heating system too. The ability to remove all the unit components simply by taking off the cover grid saves the need for additional inspection openings in the floor area.
As a result, the floor covering (carpet, tiles, etc.) can be coordinated directly with the floor unit itself. It is even possible to put down screed, assuming minimum installation height specifications are adhered to.

In most cases, units are integrated into the building structure during the preliminary building work, something which often results in them getting extremely dirty. However, the fixed piping system described previously allows piping to be installed quickly at the water side without the need to reach inside the tray or, therefore, remove the installation protection cover. As a result, not only is the installation process guaranteed to be quick, but it also prevents the units from getting dirty.

As a means of providing electrical components with full protection against damage caused by dirt during preliminary building work, function units containing electrical components can be supplied further down the line thanks to the modular unit structure. The empty housing with installation protection cover is installed and fastened in place during the preliminary building work.
It is possible to connect the piping at the water side to the tray as early as this point. Additionally, the electrical cables required come fully pre-wired and are attached to the exterior of the tray by means of screw-in connectors. The customer can carry out wiring work outside the tray easily using the mating connectors supplied.
Once the preliminary building work is complete, the function units can then be simply inserted and connected up.

The images above illustrate how function units are removed from the emcovent UZA.
The first function unit can be removed from above once the cover grating has been removed and the damper register has been folded back. Following this, the second function unit can be pulled into the front empty tray area and then also removed from above.

emcovent UZS (width 345 mm, length 1150 mm) – dimensioning examples

Basic conditions: building/room type T [s] according to VDI 2081 (individual office)						
Room data	**Unit**	**Value**	**Climate data, summer (cooling)**	**Symbol**	**Unit**	**Value**
Height	m	3.00	Flow temperature	t_V	°C	6
Width	m	5.00	Return temperature	t_R	°C	12
Depth	m	4.00	Air inlet temperature, secondary air	t_{SEC}	°C	26
Surface area	m²	20	Relative humidity, secondary air	φ_{SEC}	%	50
Volume	m³	60	Air inlet temperature, external air	t_{ODA}	°C	32
Distance from sound source[1)]	m	3.00	Relative humidity, external air	φ_{ODA}	%	40

[1)] Direction factor Q=4 (sphere quadrant)

The following values can be derived on the basis of the specified building and climate parameters:

2-pipe and 4-pipe system	**Symbol**	**Unit**	**Secondary air operation**					**External air operation**			
External air component	$\dot{V}_{ODA}$	m³/h	0	0	0	0	0	30	60	90	120
Secondary air component	$\dot{V}_{SEC}$	m³/h	38	79	130	180	220	0	0	0	0
Supply air quantity	$\dot{V}_{sup}$	m³/h	38	79	130	180	220	30	60	90	120
Sound power level	L_{WA}	dB(A)	27	30	38	48	56	29	29	35	42
125 Hz	L_{WA125}	dB	30	35	39	44	48	33	38	45	51
250 Hz	L_{WA250}	dB	20	29	37	43	48	35	33	38	45
500 Hz	L_{WA500}	dB	18	25	36	46	56	21	24	31	37
1000 Hz	L_{WA1000}	dB	21	24	33	43	49	13	19	28	35
2000 Hz	L_{WA2000}	dB	15	18	29	40	47	13	14	22	32
4000 Hz	L_{WA4000}	dB	18	22	27	33	41	18	16	17	23
8000 Hz	L_{WA8000}	dB	23	23	23	26	33	23	23	23	23
Sound pressure level[2)]	L_{PA}	dB(A)	21	24	32	42	50	23	23	29	36
Power consumption	p_{el}	W	1	2	5	8	13	3	4	6	10
2-pipe system	**Symbol**	**Unit**	**Secondary air operation**					**External air operation**			
Supply air temperature	t_{SUP}	°C	9	11	12	13	13	7	10	11	12
Condensate quantity	$\dot{m}_K$	l/h	0.2	0.3	0.4	0.5	0.6	0.2	0.4	0.6	0.7
Water mass flow rate	$\dot{m}_W$	l/h	50	89	131	165	188	59	102	141	177
Pressure loss, water side	Δp_W	kPa	0.0	0.6	1.4	2.3	2.9	0.2	0.9	1.7	2.6
Cooling power, sensitive	$\dot{Q}_{K, sens}$	W	216	400	608	793	927	250	443	625	796
Cooling power, latent	$\dot{Q}_{K, lat}$	W	134	223	307	362	388	163	271	365	445
Cooling power, total	$\dot{Q}_K$	**W**	**351**	**623**	**915**	**1155**	**1315**	**413**	**714**	**990**	**1241**
Useful cooling power	$\dot{Q}_{K, nutz}$	**W**	**212**	**391**	**595**	**775**	**907**	**182**	**309**	**425**	**531**
4-pipe system	**Symbol**	**Unit**	**Secondary air operation**					**External air operation**			
Supply air temperature	t_{SUP}	°C	9	11	12	13	14	8	10	12	12
Condensate quantity	$\dot{m}_K$	l/h	0.2	0.3	0.4	0.5	0.6	0.2	0.4	0.6	0.7
Water mass flow rate	$\dot{m}_W$	l/h	49	87	129	163	186	57	100	139	175
Pressure loss, water side	Δp_W	kPa	0.7	3.2	6.9	10.6	13.5	1.2	4.2	7.9	12.1
Cooling power, sensitive	$\dot{Q}_{K, sens}$	W	211	394	603	787	922	243	435	617	788
Cooling power, latent	$\dot{Q}_{K, lat}$	W	129	217	300	355	380	156	264	357	436
Cooling power, total	$\dot{Q}_K$	**W**	**340**	**611**	**903**	**1142**	**1302**	**399**	**699**	**974**	**1225**
Useful cooling power	$\dot{Q}_{K, nutz}$	**W**	**206**	**386**	**589**	**770**	**902**	**175**	**301**	**418**	**524**

[2)] Approximation in acc. with VDI 2081

Mixed air operation. 2-pipe and 4-pipe system																			
30	30	30	30	30	60	60	60	60	60	90	90	90	90	90	120	120	120	120	120
20	62	115	170	218	10	52	105	160	208	10	31	93	147	199	5	16	68	134	188
50	92	145	200	248	70	112	165	220	268	100	121	183	237	289	125	136	188	254	308
31	33	39	48	56	31	33	39	48	56	36	36	40	48	56	42	42	43	49	56
35	37	40	45	48	38	40	41	45	48	45	46	46	48	50	51	51	51	52	53
35	36	39	44	48	33	35	39	44	48	38	39	41	44	48	45	45	45	47	49
22	26	36	46	56	25	27	36	46	56	31	32	37	47	56	37	37	39	47	56
21	24	33	43	49	23	25	33	43	49	29	30	34	43	49	36	36	37	44	49
17	19	29	40	47	17	20	29	40	47	22	23	30	41	47	32	32	33	41	47
21	23	27	33	41	20	23	27	33	41	21	23	27	33	41	24	26	28	33	41
26	26	26	28	33	26	26	26	28	33	26	26	26	28	33	26	26	26	28	33
25	26	32	42	50	25	26	32	42	50	30	30	34	42	50	36	36	37	43	50
4	6	8	12	17	5	6	9	12	17	7	9	11	14	19	11	12	15	18	23
Mixed air operation. 2-pipe system																			
10	11	12	13	14	11	12	13	14	14	12	12	13	14	15	12	13	14	14	15
0.3	0.4	0.5	0.6	0.6	0.4	0.5	0.6	0.7	0.7	0.6	0.6	0.7	0.7	0.7	0.7	0.7	0.8	0.8	0.7
77	114	154	188	212	110	143	179	210	231	149	164	202	229	248	181	188	218	247	264
0.4	1.1	2.0	2.9	3.6	1.0	1.7	2.6	3.5	4.2	1.9	2.2	3.3	4.2	4.8	2.7	2.9	3.8	4.8	5.4
336	512	719	911	1063	483	650	844	1026	1168	663	741	958	1127	1273	814	852	1027	1225	1368
206	285	359	406	421	289	354	412	444	447	379	405	459	476	466	450	461	496	505	481
541	**797**	**1078**	**1317**	**1484**	**772**	**1003**	**1256**	**1469**	**1615**	**1041**	**1146**	**1417**	**1603**	**1739**	**1264**	**1313**	**1523**	**1730**	**1848**
266	**440**	**642**	**831**	**979**	**349**	**513**	**704**	**882**	**1022**	**463**	**540**	**754**	**920**	**1063**	**549**	**587**	**760**	**955**	**1096**
Mixed air operation. 4-pipe system																			
10	12	13	13	14	11	12	13	14	14	12	12	13	14	15	13	13	14	14	15
0.3	0.4	0.5	0.6	0.6	0.4	0.5	0.6	0.7	0.7	0.6	0.6	0.7	0.7	0.7	0.7	0.7	0.8	0.8	0.7
75	112	152	186	210	108	141	177	208	229	146	161	200	227	246	178	185	215	245	262
2.4	5.3	9.3	13.5	16.9	4.9	8.1	12.4	16.5	19.7	8.7	10.4	15.5	19.4	22.5	12.5	13.4	17.6	22.3	25.2
329	506	713	906	1057	476	643	838	1020	1162	655	734	951	1121	1266	806	845	1020	1218	1361
199	277	352	398	414	281	346	404	436	438	370	396	451	468	457	441	452	487	496	472
528	**784**	**1064**	**1304**	**1471**	**757**	**989**	**1242**	**1455**	**1601**	**1025**	**1130**	**1402**	**1588**	**1724**	**1248**	**1297**	**1507**	**1714**	**1833**
260	**434**	**636**	**825**	**973**	**342**	**506**	**697**	**876**	**1016**	**456**	**533**	**748**	**914**	**1057**	**542**	**580**	**753**	**949**	**1089**

emcovent UZS (width 345 mm, length 1150 mm) – dimensioning examples

Basic conditions: building/room type T [s] according to VDI 2081 (individual office)						
Room data	**Unit**	**Value**	**Climate data, summer (cooling)**	**Symbol**	**Unit**	**Value**
Height	m	3.00	Flow temperature	t_V	°C	**10**
Width	m	5.00	Return temperature	t_R	°C	**15**
Depth	m	4.00	Air inlet temperature, secondary air	t_{SEC}	°C	26
Surface area	m²	20	Relative humidity, secondary air	φ_{SEC}	%	50
Volume	m³	60	Air inlet temperature, external air	t_{ODA}	°C	32
Distance from sound source[1)]	m	3.00	Relative humidity, external air	φ_{ODA}	%	40

[1)] Direction factor Q=4 (sphere quadrant)

The following values can be derived on the basis of the specified building and climate parameters:

2-pipe and 4-pipe system	**Symbol**	**Unit**	**Secondary air operation**					**External air operation**			
External air component	$\dot{V}_{ODA}$	m³/h	0	0	0	0	0	30	60	90	120
Secondary air component	$\dot{V}_{SEC}$	m³/h	38	79	130	180	220	0	0	0	0
Supply air quantity	$\dot{V}_{sup}$	m³/h	38	79	130	180	220	30	60	90	120
Sound power level	L_{WA}	dB(A)	27	30	38	48	56	29	29	35	42
125 Hz	L_{WA125}	dB	30	35	39	44	48	33	38	45	51
250 Hz	L_{WA250}	dB	20	29	37	43	48	35	33	38	45
500 Hz	L_{WA500}	dB	18	25	36	46	56	21	24	31	37
1000 Hz	L_{WA1000}	dB	21	24	33	43	49	13	19	28	35
2000 Hz	L_{WA2000}	dB	15	18	29	40	47	13	14	22	32
4000 Hz	L_{WA4000}	dB	18	22	27	33	41	18	16	17	23
8000 Hz	L_{WA8000}	dB	23	23	23	26	33	23	23	23	23
Sound pressure level[2)]	L_{PA}	dB(A)	21	24	32	42	50	23	23	29	36
Power consumption	p_{el}	W	1	2	5	8	13	3	4	6	10
2-pipe system	**Symbol**	**Unit**	**Secondary air operation**					**External air operation**			
Supply air temperature	t_{SUP}	°C	12	14	15	16	16	11	13	14	15
Condensate quantity	$\dot{m}_K$	l/h	0.1	0.2	0.2	0.2	0.2	0.2	0.3	0.4	0.5
Water mass flow rate	$\dot{m}_W$	l/h	44	75	107	131	146	58	98	134	166
Pressure loss, water side	Δp_W	kPa	0.0	0.4	0.9	1.4	1.8	0.1	0.8	1.5	2.3
Cooling power, sensitive	$\dot{Q}_{K,\,sens}$	W	172	318	484	630	737	212	376	530	675
Cooling power, latent	$\dot{Q}_{K,\,lat}$	W	83	119	139	133	112	126	197	253	296
Cooling power, total	$\dot{Q}_K$	**W**	**255**	**437**	**622**	**763**	**849**	**339**	**573**	**783**	**971**
Useful cooling power	$\dot{Q}_{K,\,nutz}$	**W**	**168**	**311**	**473**	**616**	**721**	**146**	**244**	**334**	**416**
4-pipe system	**Symbol**	**Unit**	**Secondary air operation**					**External air operation**			
Supply air temperature	t_{SUP}	°C	13	14	15	16	16	12	14	15	15
Condensate quantity	$\dot{m}_K$	l/h	0.1	0.2	0.2	0.2	0.1	0.2	0.3	0.4	0.5
Water mass flow rate	$\dot{m}_W$	l/h	42	73	105	129	144	56	96	132	164
Pressure loss, water side	Δp_W	kPa	0.4	2.2	4.6	6.9	8.4	1.1	3.9	7.1	10.7
Cooling power, sensitive	$\dot{Q}_{K,\,sens}$	W	168	314	479	626	733	206	369	524	669
Cooling power, latent	$\dot{Q}_{K,\,lat}$	W	77	113	132	127	105	119	189	244	287
Cooling power, total	$\dot{Q}_K$	**W**	**245**	**426**	**611**	**753**	**838**	**325**	**558**	**768**	**956**
Useful cooling power	$\dot{Q}_{K,\,nutz}$	**W**	**164**	**307**	**469**	**612**	**717**	**139**	**238**	**328**	**410**

[2)] Approximation in acc. with VDI 2081

Mixed air operation, 2-pipe and 4-pipe system																			
30	30	30	30	30	60	60	60	60	60	90	90	90	90	90	120	120	120	120	120
20	62	115	170	218	10	52	105	160	208	10	31	93	147	199	5	16	68	134	188
50	92	145	200	248	70	112	165	220	268	100	121	183	237	289	125	136	188	254	308
31	33	39	48	56	31	33	39	48	56	36	36	40	48	56	42	42	43	49	56
35	37	40	45	48	38	40	41	45	48	45	46	46	48	50	51	51	51	52	53
35	36	39	44	48	33	35	39	44	48	38	39	41	44	48	45	45	45	47	49
22	26	36	46	56	25	27	36	46	56	31	32	37	47	56	37	37	39	47	56
21	24	33	43	49	23	25	33	43	49	29	30	34	43	49	36	36	37	44	49
17	19	29	40	47	17	20	29	40	47	22	23	30	41	47	32	32	33	41	47
21	23	27	33	41	20	23	27	33	41	21	23	27	33	41	24	26	28	33	41
26	26	26	28	33	26	26	26	28	33	26	26	26	28	33	26	26	26	28	33
25	26	32	42	50	25	26	32	42	50	30	30	34	42	50	36	36	37	43	50
4	6	8	12	17	5	6	9	12	17	7	9	11	14	19	11	12	15	18	23
Mixed air operation. 2-pipe system																			
13	14	15	16	16	14	15	16	16	17	15	15	16	17	17	15	16	16	17	17
0.2	0.2	0.3	0.2	0.2	0.3	0.3	0.3	0.3	0.2	0.4	0.4	0.4	0.3	0.2	0.5	0.5	0.4	0.3	0.2
72	100	129	152	166	104	128	153	172	182	139	150	175	189	197	169	173	191	205	210
0.3	0.8	1.4	1.9	2.3	0.9	1.4	2.0	2.4	2.7	1.6	1.9	2.5	2.9	3.1	2.4	2.5	3.0	3.4	3.5
279	418	581	734	853	407	538	690	833	945	560	621	790	922	1036	689	719	855	1009	1119
141	165	173	153	113	200	210	202	168	115	253	251	228	180	111	294	290	260	189	104
420	**583**	**754**	**887**	**966**	**608**	**748**	**893**	**1001**	**1060**	**813**	**872**	**1018**	**1103**	**1146**	**983**	**1009**	**1114**	**1198**	**1222**
212	**349**	**508**	**657**	**774**	**276**	**404**	**555**	**695**	**804**	**364**	**424**	**592**	**722**	**833**	**429**	**459**	**594**	**746**	**854**
Mixed air operation. 4-pipe system																			
13	15	15	16	17	14	15	16	16	17	15	15	16	17	17	15	16	16	17	18
0.2	0.2	0.2	0.2	0.2	0.3	0.3	0.3	0.2	0.2	0.4	0.4	0.3	0.3	0.2	0.5	0.5	0.4	0.3	0.2
70	98	127	150	164	102	126	151	169	180	137	147	172	187	194	166	170	189	203	207
2.0	4.1	6.7	9.1	10.7	4.4	6.6	9.2	11.4	12.7	7.7	8.8	11.7	13.6	14.6	11.0	11.5	13.9	15.8	16.4
273	413	577	729	848	401	532	685	828	940	553	615	785	917	1031	683	713	849	1003	1114
134	158	166	146	106	193	203	195	160	108	245	243	220	172	102	285	282	251	181	95
407	**571**	**742**	**875**	**954**	**594**	**735**	**880**	**989**	**1048**	**798**	**858**	**1005**	**1090**	**1133**	**968**	**995**	**1100**	**1184**	**1209**
206	**344**	**504**	**653**	**770**	**270**	**399**	**550**	**690**	**800**	**358**	**419**	**586**	**717**	**828**	**423**	**453**	**588**	**740**	**849**

emcovent UZS (width 345 mm, length 1150 mm) – dimensioning examples

Basic conditions: building/room type T [s] according to VDI 2081 (individual office)						
Room data	**Unit**	**Value**	**Climate data, summer (cooling)**	**Symbol**	**Unit**	**Value**
Height	m	3.00	Flow temperature	t_V	°C	**16**
Width	m	5.00	Return temperature	t_R	°C	**18**
Depth	m	4.00	Air inlet temperature, secondary air	t_{SEC}	°C	26
Surface area	m²	20	Relative humidity, secondary air	φ_{SEC}	%	50
Volume	m³	60	Air inlet temperature, external air	t_{ODA}	°C	32
Distance from sound source[1]	m	3.00	Relative humidity, external air	φ_{ODA}	%	40

[1] Direction factor Q=4 (sphere quadrant)

The following values can be derived on the basis of the specified building and climate parameters:

2-pipe and 4-pipe system	**Symbol**	**Unit**	**Secondary air operation**					**External air operation**			
External air component	$\dot{V}_{ODA}$	m³/h	0	0	0	0	0	30	60	90	120
Secondary air component	$\dot{V}_{SEC}$	m³/h	38	79	130	180	220	0	0	0	0
Supply air quantity	$\dot{V}_{sup}$	m³/h	38	79	130	180	220	30	60	90	120
Sound power level	L_{WA}	dB(A)	27	30	38	48	56	29	29	35	42
125 Hz	L_{WA125}	dB	30	35	39	44	48	33	38	45	51
250 Hz	L_{WA250}	dB	20	29	37	43	48	35	33	38	45
500 Hz	L_{WA500}	dB	18	25	36	46	56	21	24	31	37
1000 Hz	L_{WA1000}	dB	21	24	33	43	49	13	19	28	35
2000 Hz	L_{WA2000}	dB	15	18	29	40	47	13	14	22	32
4000 Hz	L_{WA4000}	dB	18	22	27	33	41	18	16	17	23
8000 Hz	L_{WA8000}	dB	23	23	23	26	33	23	23	23	23
Sound pressure level[2]	L_{PA}	dB(A)	21	24	32	42	50	23	23	29	36
Power consumption	p_{el}	W	1	2	5	8	13	3	4	6	10
2-pipe system	**Symbol**	**Unit**	**Secondary air operation**					**External air operation**			
Supply air temperature	t_{SUP}	°C	17	18	19	19	19	16	18	18	19
Condensate quantity	$\dot{m}_K$	l/h	0.0	0.0	0.0	0.0	0.0	0.1	0.1	0.1	0.1
Water mass flow rate	$\dot{m}_W$	l/h	50	91	139	181	212	99	158	209	251
Pressure loss, water side	Δp_W	kPa	0.0	0.7	1.6	2.7	3.6	0.8	2.1	3.5	4.9
Cooling power, sensitive	$\dot{Q}_{K,\,sens}$	W	116	213	325	423	494	164	290	408	520
Cooling power, latent	$\dot{Q}_{K,\,lat}$	W	0	0	0	0	0	67	79	79	66
Cooling power, total	$\dot{Q}_K$	**W**	**116**	**213**	**325**	**423**	**494**	**230**	**369**	**487**	**586**
Useful cooling power	$\dot{Q}_{K,\,nutz}$	**W**	**113**	**209**	**317**	**413**	**483**	**99**	**162**	**218**	**267**
4-pipe system	**Symbol**	**Unit**	**Secondary air operation**					**External air operation**			
Supply air temperature	t_{SUP}	°C	17	18	19	19	19	16	18	19	19
Condensate quantity	$\dot{m}_K$	l/h	0.0	0.0	0.0	0.0	0.0	0.1	0.1	0.1	0.1
Water mass flow rate	$\dot{m}_W$	l/h	48	90	138	180	210	94	153	203	246
Pressure loss, water side	Δp_W	kPa	0.7	3.5	7.8	12.7	16.9	3.7	9.4	15.9	22.4
Cooling power, sensitive	$\dot{Q}_{K,\,sens}$	W	113	211	322	420	491	159	285	403	515
Cooling power, latent	$\dot{Q}_{K,\,lat}$	W	0	0	0	0	0	60	72	71	58
Cooling power, total	$\dot{Q}_K$	**W**	**113**	**211**	**322**	**420**	**491**	**219**	**356**	**474**	**573**
Useful cooling power	$\dot{Q}_{K,\,nutz}$	**W**	**110**	**206**	**315**	**411**	**480**	**94**	**157**	**213**	**262**

[2] Approximation in acc. with VDI 2081

Mixed air operation. 2-pipe and 4-pipe system																			
30	30	30	30	30	60	60	60	60	60	90	90	90	90	90	120	120	120	120	120
20	62	115	170	218	10	52	105	160	208	10	31	93	147	199	5	16	68	134	188
50	92	145	200	248	70	112	165	220	268	100	121	183	237	289	125	136	188	254	308
31	33	39	48	56	31	33	39	48	56	36	36	40	48	56	42	42	43	49	56
35	37	40	45	48	38	40	41	45	48	45	46	46	48	50	51	51	51	52	53
35	36	39	44	48	33	35	39	44	48	38	39	41	44	48	45	45	45	47	49
22	26	36	46	56	25	27	36	46	56	31	32	37	47	56	37	37	39	47	56
21	24	33	43	49	23	25	33	43	49	29	30	34	43	49	36	36	37	44	49
17	19	29	40	47	17	20	29	40	47	22	23	30	41	47	32	32	33	41	47
21	23	27	33	41	20	23	27	33	41	21	23	27	33	41	24	26	28	33	41
26	26	26	28	33	26	26	26	28	33	26	26	26	28	33	26	26	26	28	33
25	26	32	42	50	25	26	32	42	50	30	30	34	42	50	36	36	37	43	50
4	6	8	12	17	5	6	9	12	17	7	9	11	14	19	11	12	15	18	23
Mixed air operation. 2-pipe system																			
17	18	19	19	20	18	19	19	20	20	19	19	20	20	20	19	19	20	20	21
0.1	0.0	0.0	0.0	0.0	0.1	0.0	0.0	0.0	0.0	0.1	0.0	0.0	0.0	0.0	0.1	0.1	0.0	0.0	0.0
105	126	173	216	250	159	166	209	250	281	208	206	243	280	311	250	247	266	309	339
0.9	1.3	2.5	3.7	4.9	2.1	2.3	3.5	4.9	6.0	3.5	3.4	4.6	6.0	7.3	4.9	4.8	5.5	7.2	8.5
206	295	403	504	583	310	387	488	582	655	427	466	567	653	726	529	548	621	721	791
39	0	0	0	0	62	0	0	0	0	59	16	0	0	0	54	29	0	0	0
245	**295**	**403**	**504**	**583**	**372**	**387**	**488**	**582**	**655**	**486**	**482**	**567**	**653**	**726**	**583**	**577**	**621**	**721**	**791**
141	**228**	**335**	**434**	**511**	**182**	**259**	**358**	**451**	**522**	**236**	**275**	**375**	**460**	**532**	**276**	**295**	**368**	**467**	**536**
Mixed air operation. 4-pipe system																			
18	18	19	19	20	18	19	19	20	20	19	19	20	20	20	19	19	20	20	21
0.1	0.0	0.0	0.0	0.0	0.1	0.0	0.0	0.0	0.0	0.1	0.0	0.0	0.0	0.0	0.1	0.1	0.0	0.0	0.0
100	125	171	215	248	154	164	208	248	279	203	201	241	278	310	244	242	265	307	338
4.3	6.5	11.6	17.5	22.9	9.6	10.8	16.5	22.9	28.4	15.8	15.6	21.7	28.2	34.3	22.2	21.8	25.7	33.9	40.3
202	291	400	501	580	305	383	485	579	652	422	461	563	649	722	524	543	617	717	788
32	0	0	0	0	55	0	0	0	0	51	8	0	0	0	46	21	0	0	0
234	**291**	**400**	**501**	**580**	**360**	**383**	**485**	**579**	**652**	**473**	**470**	**563**	**649**	**722**	**570**	**564**	**617**	**717**	**788**
137	**225**	**331**	**431**	**508**	**177**	**255**	**355**	**447**	**519**	**232**	**271**	**371**	**456**	**529**	**271**	**290**	**364**	**463**	**533**

emcovent UZS (width 345 mm, length 1150 mm) – dimensioning examples

Basic conditions: building/room type T [s] according to VDI 2081 (individual office)						
Room data	**Unit**	**Value**	**Climate data winter (heating)**	**Symbol**	**Unit**	**Value**
Height	m	3.00	Flow temperature	t_V	°C	75
Width	m	5.00	Return temperature	t_R	°C	65
Depth	m	4.00	Air inlet temperature, secondary air	t_{SEC}	°C	20
Surface area	m²	20	Relative humidity, secondary air	φ_{SEC}	%	50
Volume	m³	60	Air inlet temperature, external air	t_{ODA}	°C	–12
Distance from sound source[1]	m	3.00	Relative humidity, external air	φ_{ODA}	%	50

[1] Direction factor Q=4 (sphere quadrant)

The following values can be derived on the basis of the specified building and climate parameters:

2-pipe and 4-pipe system	**Symbol**	**Unit**	**Secondary air operation**					**External air operation**			
External air component	$\dot{V}_{ODA}$	m³/h	0	0	0	0	0	30	60	90	120
Secondary air component	$\dot{V}_{SEC}$	m³/h	38	79	130	180	220	0	0	0	0
Supply air quantity	$\dot{V}_{SUP}$	m³/h	38	79	130	180	220	30	60	90	120
Sound power level	L_{WA}	dB(A)	27	30	38	48	56	29	29	35	42
Sound pressure level[2]	L_{PA}	dB(A)	21	24	32	42	50	23	23	29	36
Power consumption	p_{el}	W	1	2	5	8	13	3	4	6	10
2-pipe system	**Symbol**	**Unit**	**Secondary air operation**					**External air operation**			
Supply air temperature	t_{SUP}	°C	59.5	58.6	57.5	56.3	55.4	52.8	51.9	50.9	49.8
Water mass flow rate	$\dot{m}_W$	l/h	43	88	140	188	224	56	110	163	214
Pressure loss, water side	Δp_W	kPa	0.1	0.4	1.0	1.8	2.4	0.2	0.7	1.4	2.2
Heating power, total	$\dot{Q}_H$	**W**	**503**	**1024**	**1636**	**2196**	**2615**	**653**	**1288**	**1901**	**2491**
Useful heating power	$\dot{Q}_{H,\,nutz}$	**W**	**503**	**1024**	**1636**	**2196**	**2615**	**372**	**724**	**1051**	**1353**
4-pipe system	**Symbol**	**Unit**	**Secondary air operation**					**External air operation**			
Supply air temperature	t_{SUP}	°C	54.8	46.5	42.9	40.8	39.4	51.8	35.8	30.1	26.9
Water mass flow rate	$\dot{m}_W$	l/h	38	60	86	108	123	55	83	109	134
Pressure loss, water side	Δp_W	kPa	0.3	0.8	1.5	2.3	2.9	0.7	1.4	2.4	3.4
Heating power, total	$\dot{Q}_H$	**W**	**444**	**703**	**1001**	**1258**	**1432**	**643**	**963**	**1273**	**1568**
Useful heating power	$\dot{Q}_{H,\,nutz}$	**W**	**444**	**703**	**1001**	**1258**	**1432**	**361**	**359**	**345**	**314**

[2] Approximation in acc. with VDI 2081

Mixed air operation. 2-pipe and 4-pipe system																			
30	30	30	30	30	60	60	60	60	60	90	90	90	90	90	120	120	120	120	120
20	62	115	170	218	10	52	105	160	208	10	31	93	147	199	5	16	68	134	188
50	92	145	200	248	70	112	165	220	268	100	121	183	237	289	125	136	188	254	308
31	33	39	48	56	31	33	39	48	56	36	36	40	48	56	42	42	43	49	56
25	26	32	42	50	25	26	32	42	50	30	30	34	42	50	36	36	37	43	50
4	6	8	12	17	5	6	9	12	17	7	9	11	14	19	11	12	15	18	23
Mixed air operation. 2-pipe system																			
54.9	55.7	55.3	54.4	53.5	52.5	53.5	53.4	52.7	51.8	51.2	51.7	51.7	51.1	50.3	49.9	50.1	50.3	49.7	48.9
79	124	177	228	269	122	166	218	267	306	174	195	255	301	342	219	230	279	334	375
0.4	0.8	1.6	2.5	3.4	0.8	1.4	2.3	3.3	4.3	1.5	1.9	3.0	4.1	5.2	2.3	2.5	3.6	5.0	6.2
922	**1450**	**2070**	**2664**	**3141**	**1419**	**1939**	**2541**	**3112**	**3568**	**2026**	**2280**	**2972**	**3513**	**3986**	**2551**	**2681**	**3254**	**3901**	**4370**
659	**1241**	**1934**	**2599**	**3135**	**861**	**1419**	**2081**	**2716**	**3224**	**1181**	**1448**	**2194**	**2788**	**3311**	**1414**	**1548**	**2153**	**2852**	**3365**
Mixed air operation. 4-pipe system																			
43.6	39.9	38.3	37.0	35.8	35.3	34.7	34.4	33.8	32.9	30.3	30.7	31.2	31.0	30.2	27.1	27.4	28.4	28.4	27.8
63	82	107	128	144	87	106	128	147	160	113	123	147	164	175	136	141	160	179	187
0.9	1.4	2.3	3.2	3.9	1.6	2.2	3.1	4.0	4.7	2.5	2.9	4.0	4.9	5.5	3.5	3.7	4.7	5.7	6.2
732	**961**	**1244**	**1497**	**1674**	**1014**	**1232**	**1492**	**1717**	**1864**	**1324**	**1429**	**1713**	**1908**	**2036**	**1592**	**1644**	**1870**	**2084**	**2184**
445	**691**	**1003**	**1286**	**1484**	**404**	**623**	**900**	**1145**	**1306**	**390**	**490**	**777**	**981**	**1116**	**335**	**381**	**595**	**807**	**904**

emcovent UZS (width 345 mm, length 1150 mm) – dimensioning examples

Basic conditions: building/room type T [s] according to VDI 2081 (individual office)						
Room data	**Unit**	**Value**	**Climate data winter (heating)**	**Symbol**	**Unit**	**Value**
Height	m	3.00	Flow temperature	t_V	°C	75
Width	m	5.00	Return temperature	t_R	°C	65
Depth	m	4.00	Air inlet temperature, secondary air	t_{SEC}	°C	20
Surface area	m²	20	Relative humidity, secondary air	φ_{SEC}	%	50
Volume	m³	60	Air inlet temperature, external air	t_{ODA}	°C	–12
Distance from sound source[1]	m	3.00	Relative humidity, external air	φ_{ODA}	%	50

[1] Direction factor Q=4 (sphere quadrant)

The following values can be derived on the basis of the specified building and climate parameters:

2-pipe and 4-pipe system	**Symbol**	**Unit**	**Secondary air operation**					**External air operation**			
External air component	$\dot{V}_{ODA}$	m³/h	0	0	0	0	0	30	60	90	120
Secondary air component	$\dot{V}_{SEC}$	m³/h	38	79	130	180	220	0	0	0	0
Supply air quantity	$\dot{V}_{SUP}$	m³/h	38	79	130	180	220	30	60	90	120
Sound power level	L_{WA}	dB(A)	27	30	38	48	56	29	29	35	42
Sound pressure level[2]	L_{PA}	dB(A)	21	24	32	42	50	23	23	29	36
Power consumption	p_{el}	W	1	2	5	8	13	3	4	6	10
2-pipe system	**Symbol**	**Unit**	**Secondary air operation**					**External air operation**			
Supply air temperature	t_{SUP}	°C	55.5	54.8	53.7	52.7	51.9	49.3	48.5	47.5	46.6
Water mass flow rate	$\dot{m}_W$	l/h	39	79	126	169	202	51	101	149	195
Pressure loss, water side	Δp_W	kPa	0.1	0.4	0.8	1.4	2.0	0.1	0.6	1.1	1.9
Heating power, total	$\dot{Q}_H$	**W**	**453**	**922**	**1473**	**1976**	**2353**	**597**	**1178**	**1739**	**2278**
Useful heating power	$\dot{Q}_{H, nutz}$	**W**	**453**	**922**	**1473**	**1976**	**2353**	**330**	**641**	**930**	**1195**
4-pipe system	**Symbol**	**Unit**	**Secondary air operation**					**External air operation**			
Supply air temperature	t_{SUP}	°C	51.3	43.8	40.6	38.7	37.4	48.4	33.7	28.5	25.5
Water mass flow rate	$\dot{m}_W$	l/h	34	54	77	97	110	50	75	100	123
Pressure loss, water side	Δp_W	kPa	0.2	0.6	1.3	1.9	2.4	0.5	1.2	2.0	2.9
Heating power, total	$\dot{Q}_H$	**W**	**399**	**632**	**899**	**1128**	**1283**	**588**	**881**	**1163**	**1431**
Useful heating power	$\dot{Q}_{H, nutz}$	**W**	**399**	**632**	**899**	**1128**	**1283**	**319**	**309**	**286**	**248**

[2] Approximation in acc. with VDI 2081

Mixed air operation. 2-pipe and 4-pipe system																			
30	30	30	30	30	60	60	60	60	60	90	90	90	90	90	120	120	120	120	120
20	62	115	170	218	10	52	105	160	208	10	31	93	147	199	5	16	68	134	188
50	92	145	200	248	70	112	165	220	268	100	121	183	237	289	125	136	188	254	308
31	33	39	48	56	31	33	39	48	56	36	36	40	48	56	42	42	43	49	56
25	26	32	42	50	25	26	32	42	50	30	30	34	42	50	36	36	37	43	50
4	6	8	12	17	5	6	9	12	17	7	9	11	14	19	11	12	15	18	23
Mixed air operation. 2-pipe system																			
51.2	52.1	51.7	50.9	50.1	49.1	50.0	49.9	49.3	48.6	47.9	48.3	48.4	47.9	47.2	46.7	46.8	47.1	46.6	45.9
72	113	160	206	243	111	151	197	241	276	159	178	231	273	309	200	210	254	304	340
0.3	0.7	1.3	2.1	2.8	0.7	1.2	1.9	2.8	3.5	1.3	1.6	2.6	3.5	4.3	2.0	2.1	3.0	4.2	5.2
839	**1314**	**1872**	**2405**	**2834**	**1296**	**1763**	**2303**	**2816**	**3225**	**1851**	**2079**	**2700**	**3185**	**3609**	**2332**	**2449**	**2962**	**3542**	**3962**
586	**1106**	**1724**	**2317**	**2795**	**763**	**1261**	**1851**	**2417**	**2870**	**1045**	**1283**	**1948**	**2478**	**2942**	**1250**	**1369**	**1907**	**2530**	**2986**
Mixed air operation. 4-pipe system																			
40.9	37.7	36.3	35.1	34.1	33.3	32.9	32.7	32.1	31.4	28.7	29.1	29.7	29.5	28.9	25.7	26.0	27.0	27.1	26.6
57	75	96	115	129	79	96	116	133	144	103	111	133	148	157	124	128	145	161	169
0.7	1.2	1.9	2.6	3.2	1.3	1.9	2.6	3.3	3.9	2.1	2.4	3.4	4.1	4.5	3.0	3.2	3.9	4.8	5.2
666	**870**	**1121**	**1347**	**1504**	**925**	**1118**	**1348**	**1547**	**1677**	**1207**	**1301**	**1551**	**1722**	**1834**	**1452**	**1498**	**1697**	**1884**	**1970**
392	**609**	**885**	**1135**	**1309**	**348**	**541**	**784**	**1000**	**1141**	**326**	**413**	**665**	**844**	**960**	**267**	**308**	**494**	**678**	**761**

emcovent UZS (width 345 mm, length 1150 mm) – dimensioning examples

Basic conditions: building/room type T [s] according to VDI 2081 (individual office)						
Room data	**Unit**	**Value**	**Climate data winter (heating)**	**Symbol**	**Unit**	**Value**
Height	m	3.00	Flow temperature	t_V	°C	75
Width	m	5.00	Return temperature	t_R	°C	65
Depth	m	4.00	Air inlet temperature, secondary air	t_{SEC}	°C	20
Surface area	m²	20	Relative humidity, secondary air	φ_{SEC}	%	50
Volume	m³	60	Air inlet temperature, external air	t_{ODA}	°C	–12
Distance from sound source[1]	m	3.00	Relative humidity, external air	φ_{ODA}	%	50

[1] Direction factor Q=4 (sphere quadrant)

The following values can be derived on the basis of the specified building and climate parameters:

2-pipe and 4-pipe system	**Symbol**	**Unit**	**Secondary air operation**					**External air operation**			
External air component	$\dot{V}_{ODA}$	m³/h	0	0	0	0	0	30	60	90	120
Secondary air component	$\dot{V}_{SEC}$	m³/h	38	79	130	180	220	0	0	0	0
Supply air quantity	$\dot{V}_{SUP}$	m³/h	38	79	130	180	220	30	60	90	120
Sound power level	L_{WA}	dB(A)	27	30	38	48	56	29	29	35	42
Sound pressure level[2]	L_{PA}	dB(A)	21	24	32	42	50	23	23	29	36
Power consumption	p_{el}	W	1	2	5	8	13	3	4	6	10
2-pipe system	**Symbol**	**Unit**	**Secondary air operation**					**External air operation**			
Supply air temperature	t_{SUP}	°C	51.6	50.9	50.0	49.1	48.3	44.9	44.2	43.3	42.3
Water mass flow rate	$\dot{m}_W$	l/h	35	70	112	151	179	49	97	143	187
Pressure loss, water side	Δp_W	kPa	0.0	0.3	0.7	1.2	1.6	0.1	0.5	1.1	1.7
Heating power, total	$\dot{Q}_H$	**W**	**403**	**820**	**1309**	**1756**	**2091**	**573**	**1131**	**1669**	**2187**
Useful heating power	$\dot{Q}_{H, nutz}$	**W**	**403**	**820**	**1309**	**1756**	**2091**	**283**	**548**	**791**	**1011**
4-pipe system	**Symbol**	**Unit**	**Secondary air operation**					**External air operation**			
Supply air temperature	t_{SUP}	°C	47.8	41.2	38.3	36.5	35.4	44.0	30.0	24.9	22.1
Water mass flow rate	$\dot{m}_W$	l/h	30	48	68	86	97	48	72	96	118
Pressure loss, water side	Δp_W	kPa	0.2	0.5	1.0	1.5	1.9	0.5	1.1	1.9	2.7
Heating power, total	$\dot{Q}_H$	**W**	**355**	**561**	**796**	**998**	**1135**	**564**	**845**	**1115**	**1372**
Useful heating power	$\dot{Q}_{H, nutz}$	**W**	**355**	**561**	**796**	**998**	**1135**	**272**	**226**	**167**	**94**

[2] Approximation in acc. with VDI 2081

Mixed air operation. 2-pipe and 4-pipe system																			
30	30	30	30	30	60	60	60	60	60	90	90	90	90	90	120	120	120	120	120
20	62	115	170	218	10	52	105	160	208	10	31	93	147	199	5	16	68	134	188
50	92	145	200	248	70	112	165	220	268	100	121	183	237	289	125	136	188	254	308
31	33	39	48	56	31	33	39	48	56	36	36	40	48	56	42	42	43	49	56
25	26	32	42	50	25	26	32	42	50	30	30	34	42	50	36	36	37	43	50
4	6	8	12	17	5	6	9	12	17	7	9	11	14	19	11	12	15	18	23
Mixed air operation. 2-pipe system																			
47.0	48.1	47.9	47.2	46.5	44.8	45.9	46.0	45.6	45.0	43.6	44.1	44.5	44.1	43.5	42.4	42.7	43.1	42.8	42.2
68	104	146	187	220	106	142	183	222	253	152	169	216	253	285	192	201	240	284	315
0.3	0.6	1.1	1.7	2.3	0.6	1.0	1.7	2.4	3.0	1.2	1.4	2.3	3.0	3.7	1.8	2.0	2.7	3.7	4.5
791	**1214**	**1709**	**2181**	**2561**	**1237**	**1654**	**2134**	**2588**	**2949**	**1770**	**1974**	**2525**	**2955**	**3327**	**2236**	**2340**	**2797**	**3308**	**3677**
511	**975**	**1527**	**2056**	**2482**	**656**	**1098**	**1623**	**2125**	**2527**	**893**	**1103**	**1691**	**2159**	**2569**	**1059**	**1164**	**1638**	**2185**	**2585**
Mixed air operation. 4-pipe system																			
37.3	34.7	33.7	32.8	32.0	29.7	29.8	30.0	29.7	29.1	25.3	25.9	26.9	27.0	26.6	22.3	22.7	24.1	24.5	24.3
54	69	87	104	116	76	90	107	121	131	99	106	124	136	144	119	123	137	150	156
0.6	1.0	1.6	2.2	2.6	1.2	1.7	2.3	2.9	3.3	2.0	2.2	3.0	3.5	3.9	2.8	2.9	3.5	4.2	4.5
627	**802**	**1021**	**1217**	**1352**	**882**	**1048**	**1246**	**1417**	**1527**	**1154**	**1233**	**1448**	**1592**	**1684**	**1391**	**1430**	**1599**	**1754**	**1821**
327	**512**	**752**	**970**	**1121**	**256**	**415**	**623**	**807**	**926**	**198**	**269**	**478**	**626**	**720**	**108**	**140**	**289**	**435**	**496**

Version key

	Charac.
3 = emcovent	1
UZS0 = UZS	2 - 5
4 = 4-pipe system	
2 = 2-pipe system	6
1150 = 1150 mm length	7 - 10
200 = 200 mm height	11 - 13
B = water connection at front side, on right	
D = water connection at room side, on right	14
A = without water connection piping preinstalled at factory	
B = with fixed connection (TVU), without actuator	
F = with fixed connection (TVU), with 24 V actuator	15
624 = rolling foot grid model 624, material: aluminium, height 18 mm	
616 = rolling foot grid model 616, material aluminium, 55% free cross-section, height 22 mm) constr. height + 4 mm	
617 = rolling foot grid model 617, material aluminium, 70% free cross-section, height 22 mm) constr. height + 4 mm	
632 = linear grid model 632 (material aluminium, 57% free cross-section, height 18 mm)	
860 = rolling foot grid model 860, (stainless steel V2A (material no. 1.4301), 70% free cross-section, height 18 mm)	
950 = rolling foot grid model 950, (material wood, 55% free cross-section, height 22 mm) constr. height + 4 mm	
951 = rolling foot grid model 951, (material wood, 62% free cross-section, height 27 mm) constr. height + 9 mm	16 - 18
A1 = cover grating anodised in natural colour (E6/C0) models 616, 617, 624, 632 only	
B1 = anodised in bronze colour (E6/C33) models 616, 617, 624, 632 only	
M1 = anodised in brass colour (E6/EV3) models 616, 617, 624, 632 only	
S1 = anodised in black (E6/C35) models 616, 617, 624, 632 only	
E1 = anodised in stainless steel colour, (E2/C31) models 616, 617, 624, 632 only	
E0 = stainless steel untreated model 860 only	
J2 = maple, natural (oil-treated) model 950, 951 only	
J1 = maple, natural (varnished) model 950, 951 only	
K2 = beech, natural (oil-treated) model 950, 951 only	
K1 = beech, natural (varnished) model 950, 951 only	
H2 = oak, natural (oil-treated) model 950, 951 only	
H1 = oak, natural (varnished), model 950, 951 only	
I2 = mahogany, natural (oil-treated) model 950, 951 only	
I1 = mahogany, natural (varnished) model 950, 951 only	
L2 = merbau, natural (oil-treated) model 950, 951 only	
L1 = merbau, natural (varnished) model 950, 951 only	19 - 20
A1 = panel frame, anodised in natural colour (E6/C0)	
M1 = panel frame, anodised in brass colour (E6/EV3)	
B1 = panel frame, anodised in bronze colour (E6/C33)	
S1 = panel frame, anodised in black (E6/C35)	
E1 = panel frame, anodised in stainless steel colour (E2/C31)	21 - 22
0 = without impact sound insulation (TSD)	
1 = impact sound insulation affixed over entire area, 4 mm, made from polythene (in acc. with DIN 4109)	23
0 = without installation protection cover (MSA)	
1 = with installation protection cover (MSA)	24
1 = individual item	
2 = start of row	
3 = middle of row	
4 = end of row	25

Product group (3 = emcovent)	Model designation	Function	Duct lenght in mm	Structural height in mm	Water connection	Fixed connection preinstalled	Cover grating model	Cover grating surface	Panel frame surface	Impact sound insulation (TSD)	Installation protection cover (MSA)	Arrangement	Electrical connection	
													E9	**= junction box**
													E6	= emcoMFC-G
3	**UZS0**	**4**	**1150**	**200**	**B**	**A**	**624**	**A1**	**A1**	**0**	**0**	**1**	**E9**	**= Example**

26 - 27

Prices on request !

Heating

Cooling

Heat recovery

Supply air (SUP)

Exhaust air (ETA)

emcovent model UZA ventilation unit for floor installation.
Decentralised ventilation unit for floor installation, for heating, cooling and forced convection ventilation with heat recovery.

Description
The emcovent UZA is a ventilation unit for floor installation that offers the following functions:

- Supply air (SUP)
- Exhaust air (ETA)
- Heat recovery
- Heating
- Cooling

emcovent ventilation units for floor installation of this type have been designed to carry out ventilation and temperature control in rooms whilst adhering to comfort criteria.
The highly compact design of the emcovent UZA allows it to be integrated into the building structure with ease. A grid width of 345 mm in the visible area makes the unit the ideal choice even in buildings with high architectural demands.

All maintenance and inspection work can be carried out via the cover grid. This grid also makes it easy to remove function units.
Special insulation material conforming to VDI 6022 creates optimum thermal and sound insulation.
The heat recovery unit (WRG) reduces the amount of additional energy required for room temperature control to the absolute minimum.
If you are working with the heat recovery unit and there is a large difference in temperature between the external air and the air in the room, a stainless steel condensate trough is used to catch any condensate.
If required, this can then be discharged via a condensate drain. All components conform to VDI 6022.
An integrated heat exchanger, available as a 2-pipe or 4-pipe system, conditions the room air and supplies air to the room whilst taking acoustic and comfort requirements into consideration.

The air volume flow of up to 120 m³/h (supply and exhaust air) is achieved by means of two EC radial fans that are linked from a control perspective.
The unit can be controlled using either external emcovent control components or the building management system.
For the visible area of the unit, a linear grid or roll-up grid cover is available to choose from.

Connection to emcoMFC
The emcovent UZA models can be controlled using an emcoMFC series multifunction controller. Accordingly, they are easy to integrate into the efficient emco comfort air conditioning system, which supports customisable programming. In the context of project solutions, emco recommends the emcoMFC control system for this convector.

emcovent UZA - method of operatino

Application areas
Decentralised floor ventilation units are ideally suited to areas with high demands in terms of room air quality and thermal comfort.

- Offices and administration rooms
- Business premises
- Reception areas and foyers
- Exhibition rooms
- Rooms requiring external air
- Rooms where windows cannot be opened
- Rooms whose appearance and layout should not be disturbed by heating components

Product benefits
- Eurokonus valve connection for time-saving valve installation
- System for heating, cooling and ventilation
- High caloric output with low acoustic load
- Pleasant room climate thanks to air supply in the vicinity of the facade
- Load-bearing
- For use in false floors
- Can be adapted to suit the specific requirements of the building
- Infinitely adjustable control
- Low installation depth
- No additional inspection opening required thanks to modular structure

emcovent UZA – Method of operation
The outdoor air (ODA) is drawn in directly via the facade and passes through a filter element (F7).
The supply air opening is closed automatically by a return spring motor when the unit is switched off (normally closed). The flow volume-controlling EC fans compensate for any pressure fluctuations at the facade.
There is a heat recovery unit located downstream of the supply air fan unit, which is responsible for energy ex-change between the supply air (SUP) and exhaust air (ETA) (heat recovery ratio of up to 60 %).

Air whose temperature is precontrolled using this equipment is heated or cooled by a heat exchanger, according to the room temperature that is required. The conditioned supply air (SUP) is supplied to the room via the cover grating located in the visible area of the unit.
The exhaust air (ETA) is removed from the room via the cover and purified by a coarse dust filter (optional). Once the exhaust air has passed through the heat recovery unit, it is conveyed outdoors (EHA) via an exhaust air opening with flap.
The exhaust air flap performs the same functions as the supply air flap.

emcovent UZA – Dimensions

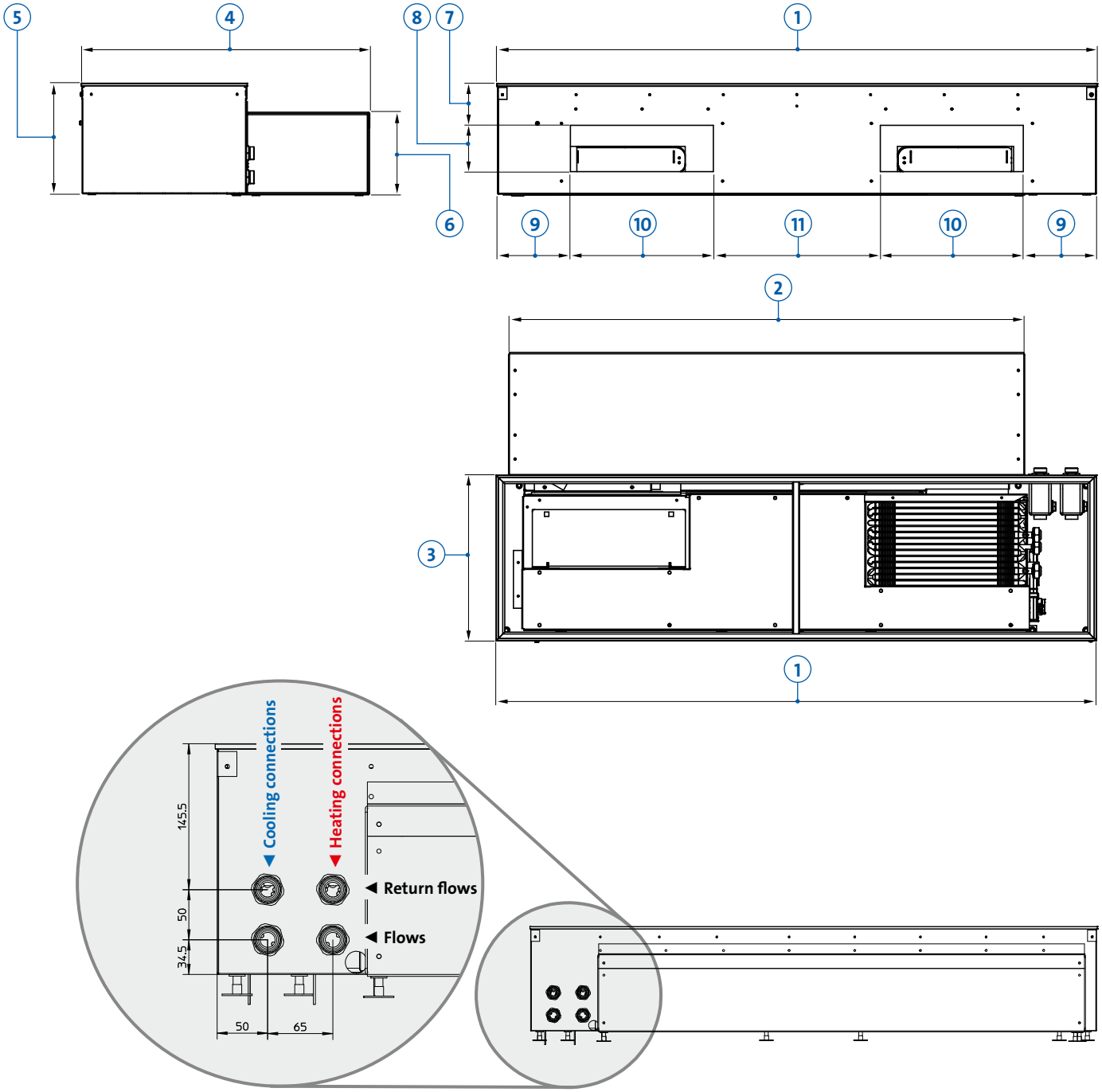

Nr.	Size	Value	Unit
1	Length of empty housing (visible area)	1250	mm
2	Length of empty housing (underneath floor)	1074	mm
3	Width of housing (visible area)	345	mm
4	Width (total)	600	mm
5	Height of housing (total)	230	mm
6	Height of empty housing (underneath floor)	172	mm
7	Distance from air outlet to upper edge	86	mm
8	Height of air inlets	97	mm
9	Distance from air inlets to side	152	mm
10	Width of air inlets	298	mm
11	Distance between air inlets	348	mm

Dimensions and position of the supply and external air connections can be individually adapted.

Available as an option:
preinstalled fixed connection
Water connections preinstalled at the factory are available as accessories for emcotherm floor convectors.
The connection set consists of:

1. Thermostat valve
   Standard TVU-E or TVU-D
   (optional: TVU-V-E or TVU-V-D)
2. Continuous actuator emcoMFC-Z-MS-S
3. Shutoff return screw connection
4. Connections inside tray, fully piped and leading outward (connection ¾“ AG); testing for leaks

Benefits:

- Huge time savings during installation
- Dirt cannot get into the floor tray during installation as the tray is able to remain sealed
- The media and electrical connections are supplied outside of the floor tray
- Media connections are fully tested for leaks at the factory

Available as an option:
ready-to-use electrical version.
All electrical components are prewired at the factory and attached to the exterior of the tray by means of screw-in connectors. The customer can carry out wiring work outside the tray easily using the mating connectors supplied.

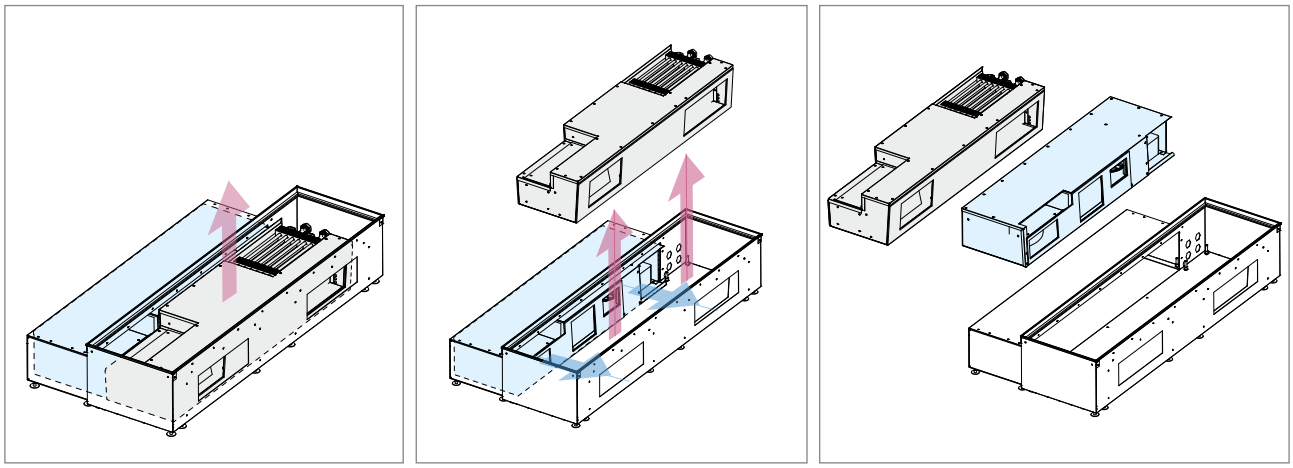

Schema of inspection option

emcovent UZA – inspection option

During the development of the emcovent UZA, ease of installation and maintenance was placed high on the agenda.
Filter units, actuators, damper registers and so on can be accessed with ease by removing the cover grid.
If required, maintenance can also be performed on the supply and exhaust air fan units, as well as the heat recovery unit, by removing the function modules via the cover grid.
What is more, it is not even necessary to disconnect the water-side connection, meaning that huge time savings can be made when draining the heating system too. The ability to remove all the unit components simply by taking off the cover saves the need for additional inspection openings in the floor area.
As a result, the floor covering (carpet, tiles, etc.) can be coordinated directly with the floor unit itself. It is even possible to put down screed, assuming minimum installation height specifications are adhered to.

In most cases, units are integrated into the building structure during the preliminary building work, something which often results in them getting extremely dirty. However, the fixed piping system described previously allows piping to be installed quickly at the water side without the need to reach inside the tray or, therefore, remove the installation protection cover. As a result, not only is the installation process guaranteed to be quick, but it also prevents the units from getting dirty.

As a means of providing electrical components with full protection against damage caused by dirt during preliminary building work, function units containing electrical components can be supplied further down the line thanks to the modular unit structure. The empty housing with installation protection cover is installed and fastened in place during the preliminary building work.
It is possible to connect the piping at the water side to the tray as early as this point. Additionally, the electrical cables required come fully pre-wired and are attached to the exterior of the tray by means of screw-in connectors. The customer can carry out wiring work outside the tray easily using the mating connectors supplied.
Once the preliminary building work is complete, the function units can then be simply inserted and connected up.

The images above illustrate how function units are removed from the emcovent UZA.
The first function unit can be removed from above once the cover grating has been removed and the damper register has been folded back. Following this, the second function unit can be pulled into the front empty tray area and then also removed from above.

emcovent UZA (length 1250 mm) – dimensioning examples

Basic conditions: building/room type T [s] according to VDI 2081 (individual office)						
Room data	**Unit**	**Value**	**Climate data, summer (cooling)**	**Symbol**	**Unit**	**Value**
Height	m	3.00	Flow temperature	t_V	°C	**6**
Width	m	5.00	Return temperature	t_R	°C	**12**
Depth	m	4.00	Relative humidity, room	t_{IDA}	°C	26
Surface area	m²	20	Air inlet temperature, external air	t_{ODA}	°C	32
Volume	m³	60	Relative humidity, external air	φ_{ODA}	%	40
Distance from sound source[1)]	m	3.00				

[1)] Direction factor Q=4 (sphere quadrant)

The following values can be derived on the basis of the specified building and climate parameters:

2- and 4-pipe system	**Symbol**	**Unit**	**External air operation**			
Air volume flow	$\dot{V}$	**m³/h**	**30**	**60**	**90**	**120**
Sound power level	L_{WA}	dB(A)	27	30	38	45
125 Hz	L_{W125}	dB	33	36	43	50
250 Hz	L_{W250}	dB	24	32	40	47
500 Hz	L_{W500}	dB	22	30	37	40
1000 Hz	L_{W1000}	dB	14	23	31	38
2000 Hz	L_{W2000}	dB	8	18	27	35
4000 Hz	L_{W4000}	dB	20	13	17	25
8000 Hz	L_{W8000}	dB	23	15	14	17
Sound pressure level[2)]	L_{PA}	dB(A)	20	24	32	39
Power consumption	p_{el}	W	5	11	18	26
2-pipe system	**Symbol**	**Unit**	**External air operation**			
Supply air temperature	t_{SUP}	°C	4.5	9.5	10.0	10.6
Condensate quantity	$\dot{m}_K$	l/h	0.2	0.3	0.5	0.6
Water mass flow rate	$\dot{m}_W$	kg/h	58	88	131	169
Pressure loss, water side	Δp_W	kPa	2.2	4.9	10.2	16.4
Heat recovery (WRG)	$\dot{Q}_{WRG}$	W	38	67	90	112
Cooling power, sensitive	$\dot{Q}_{K,\,sens}$	W	239	386	574	748
Cooling power, latent	$\dot{Q}_{K,\,lat}$	W	165	231	340	432
Cooling power, total	$\dot{Q}_K$	**W**	**441**	**684**	**1004**	**1291**
Useful cooling power	$\dot{Q}_{K,\,nutz}$	**W**	**216**	**332**	**483**	**619**
4-pipe system	**Symbol**	**Unit**	**External air operation**			
Supply air temperature	t_{SUP}	°C	8.1	12.4	12.8	13.4
Condensate quantity	$\dot{m}_K$	l/h	0.2	0.2	0.3	0.4
Water mass flow rate	$\dot{m}_W$	kg/h	47	69	102	131
Pressure loss, water side	Δp_W	kPa	1.1	2.2	4.6	7.3
Heat recovery (WRG)	$\dot{Q}_{WRG}$	W	38	67	90	112
Cooling power, sensitive	$\dot{Q}_{K,\,sens}$	W	203	328	488	636
Cooling power, latent	$\dot{Q}_{K,\,lat}$	W	128	156	227	281
Cooling power, total	$\dot{Q}_K$	**W**	**368**	**551**	**805**	**1028**
Useful cooling power	$\dot{Q}_{K,\,nutz}$	**W**	**181**	**274**	**397**	**507**

[2)] Approximation in acc. with VDI 2081

emcovent UZA (length 1250 mm) – dimensioning examples

Basic conditions: building/room type T [s] according to VDI 2081 (individual office)						
Room data	**Unit**	**Value**	**Climate data, summer (cooling)**	**Symbol**	**Unit**	**Value**
Height	m	3.00	Flow temperature	t_V	°C	**10**
Width	m	5.00	Return temperature	t_R	°C	**15**
Depth	m	4.00	Relative humidity, room	t_{IDA}	°C	26
Surface area	m^2	20	Air inlet temperature, external air	t_{ODA}	°C	32
Volume	m^3	60	Relative humidity, external air	φ_{ODA}	%	40
Distance from sound source[1)]	m	3.00	[1)] Direction factor Q=4 (sphere quadrant)			

The following values can be derived on the basis of the specified building and climate parameters:

2- and 4-pipe system	**Symbol**	**Unit**	**External air operation**			
Air volume flow	$\dot{V}$	**m^3/h**	**30**	**60**	**90**	**120**
Sound power level	L_{WA}	dB(A)	27	30	38	45
125 Hz	L_{W125}	dB	33	36	43	50
250 Hz	L_{W250}	dB	24	32	40	47
500 Hz	L_{W500}	dB	22	30	37	40
1000 Hz	L_{W1000}	dB	14	23	31	38
2000 Hz	L_{W2000}	dB	8	18	27	35
4000 Hz	L_{W4000}	dB	20	13	17	25
8000 Hz	L_{W8000}	dB	23	15	14	17
Sound pressure level[2)]	L_{PA}	dB(A)	20	24	32	39
Power consumption	p_{el}	W	5	11	18	26
2-pipe system	**Symbol**	**Unit**	**External air operation**			
Supply air temperature	t_{SUP}	°C	8	12.6	13.3	13.8
Condensate quantity	$\dot{m}_K$	l/h	0.2	0.2	0.3	0.4
Water mass flow rate	$\dot{m}_W$	kg/h	57	81	117	151
Pressure loss. water side	Δp_W	kPa	2.2	4.1	8.3	13.1
Heat recovery (WRG)	$\dot{Q}_{WRG}$	W	38	67	90	112
Cooling power. sensitive	$\dot{Q}_{K,sens}$	W	203	323	476	621
Cooling power. latent	$\dot{Q}_{K,lat}$	W	128	149	209	259
Cooling power. total	$\dot{Q}_K$	**W**	**369**	**538**	**775**	**992**
Useful cooling power	$\dot{Q}_{K,nutz}$	**W**	**181**	**269**	**385**	**492**
4-pipe system	**Symbol**	**Unit**	**External air operation**			
Supply air temperature	t_{SUP}	°C	11.1	15	15.6	16.1
Condensate quantity	$\dot{m}_K$	l/h	0.1	0.1	0.1	0.2
Water mass flow rate	$\dot{m}_W$	kg/h	45	60	86	110
Pressure loss. water side	Δp_W	kPa	1	1.7	3.3	5.2
Heat recovery (WRG)	$\dot{Q}_{WRG}$	W	38	67	90	112
Cooling power. sensitive	$\dot{Q}_{K,sens}$	W	173	275	404	528
Cooling power. latent	$\dot{Q}_{K,lat}$	W	90	75	99	112
Cooling power. total	$\dot{Q}_K$	**W**	**301**	**416**	**593**	**752**
Useful cooling power	$\dot{Q}_{K,nutz}$	**W**	**150**	**221**	**314**	**398**

[2)] Approximation in acc. with VDI 2081

emcovent UZA (length 1250 mm) – dimensioning examples

Basic conditions: building/room type T [s] according to VDI 2081 (individual office)						
Room data	**Unit**	**Value**	**Climate data, summer (cooling)**	**Symbol**	**Unit**	**Value**
Height	m	3.00	Flow temperature	t_V	°C	**16**
Width	m	5.00	Return temperature	t_R	°C	**18**
Depth	m	4.00	Room air temperature	t_{IDA}	°C	26
Surface area	m^2	20	Air inlet temperature, external air	t_{ODA}	°C	32
Volume	m^3	60	Relative humidity, external air	φ_{ODA}	%	40
Distance from sound source[1)]	m	3.00	[1)] Direction factor Q=4 (sphere quadrant)			

The following values can be derived on the basis of the specified building and climate parameters:

2- and 4-pipe system	**Symbol**	**Unit**	**External air operation**			
Air volume flow	$\dot{V}$	**m^3/h**	**30**	**60**	**90**	**120**
Sound power level	L_{WA}	dB(A)	27	30	38	45
125 Hz	L_{W125}	dB	33	36	43	50
250 Hz	L_{W250}	dB	24	32	40	47
500 Hz	L_{W500}	dB	22	30	37	40
1000 Hz	L_{W1000}	dB	14	23	31	38
2000 Hz	L_{W2000}	dB	8	18	27	35
4000 Hz	L_{W4000}	dB	20	13	17	25
8000 Hz	L_{W8000}	dB	23	15	14	17
Sound pressure level[2)]	L_{PA}	dB(A)	20	24	32	39
Power consumption	p_{el}	W	5	11	18	26
2-pipe system	**Symbol**	**Unit**	**External air operation**			
Supply air temperature	t_{SUP}	°C	12.8	16.8	17.5	18.0
Condensate quantity	$\dot{m}_K$	l/h	0.1	0	0	0
Water mass flow rate	$\dot{m}_W$	l/h	95	110	150	194
Pressure loss. water side	Δp_W	kPa	5.5	7.1	12.7	20.6
Heat recovery (WRG)	$\dot{Q}_{WRG}$	W	38	67	90	112
Cooling power. sensitive	$\dot{Q}_{K, sens}$	W	156	240	348	453
Cooling power. latent	$\dot{Q}_{K, lat}$	W	66	16	1	0
Cooling power. total	$\dot{Q}_K$	**W**	**260**	**322**	**439**	**564**
Useful cooling power	$\dot{Q}_{K, nutz}$	**W**	**133**	**186**	**257**	**323**
4-pipe system	**Symbol**	**Unit**	**External air operation**			
Supply air temperature	t_{SUP}	°C	15.1	18.6	19.3	19.7
Condensate quantity	$\dot{m}_K$	l/h	0	0	0	0
Water mass flow rate	$\dot{m}_W$	l/h	69	87	126	165
Pressure loss. water side	Δp_W	kPa	2.2	3.3	6.6	10.9
Heat recovery (WRG)	$\dot{Q}_{WRG}$	W	38	67	90	112
Cooling power. sensitive	$\dot{Q}_{K, sens}$	W	132	203	294	385
Cooling power. latent	$\dot{Q}_{K, lat}$	W	29	0	0	0
Cooling power. total	$\dot{Q}_K$	**W**	**199**	**270**	**384**	**496**
Useful cooling power	$\dot{Q}_{K, nutz}$	**W**	**110**	**149**	**204**	**255**

[2)] Approximation in acc. with VDI 2081

emcovent UZA (length 1250 mm) – dimensioning examples

Basic conditions: building/room type T [s] according to VDI 2081 (individual office)						
Room data	**Unit**	**Value**	**Climate data, winter (heating)**	**Symbol**	**Unit**	**Value**
Height	m	3.00	Flow temperature	t_V	°C	**75**
Width	m	5.00	Return temperature	t_R	°C	**65**
Depth	m	4.00	Room air temperature	t_{IDA}	°C	20
Surface area	m²	20	Air inlet temperature, external air	t_{ODA}	°C	–12
Volume	m³	60				
Distance from sound source[1)]	m	3.00	[1)] Direction factor Q=4 (sphere quadrant)			

The following values can be derived on the basis of the specified building and climate parameters:

2- and 4-pipe system	**Symbol**	**Unit**	**External air operation**			
Air volume flow	$\dot{V}$	**m³/h**	**30**	**60**	**90**	**120**
Sound power level[2]	L_{WA}	dB(A)	27	30	38	45
125 Hz	L_{W125}	dB	33	36	43	50
250 Hz	L_{W250}	dB	24	32	40	47
500 Hz	L_{W500}	dB	22	30	37	40
1000 Hz	L_{W1000}	dB	14	23	31	38
2000 Hz	L_{W2000}	dB	8	18	27	35
4000 Hz	L_{W4000}	dB	20	13	17	25
8000 Hz	L_{W8000}	dB	23	15	14	17
Sound pressure level[2)]	L_{PA}	dB(A)	20	24	32	39
Power consumption	p_{el}	W	5	11	18	26
2-pipe system	**Symbol**	**Unit**	**External air operation**			
Supply air temperature	t_{SUP}	°C	108.6	73.6	71.3	69.4
Water mass flow rate	$\dot{m}_W$	kg/h	87	117	174	230
Pressure loss. water side	Δp_W	kPa	4.1	7.2	15.2	25.5
Heat recovery (WRG)	$\dot{Q}_{WRG}$	W	201	356	481	596
Heating power total	$\dot{Q}_H$	**W**	**1213**	**1723**	**2515**	**3277**
Useful heating power	$\dot{Q}_{H,\,nutz}$	**W**	**892**	**1080**	**1550**	**1991**
4-pipe system	**Symbol**	**Unit**	**External air operation**			
Supply air temperature	t_{SUP}	°C	78.4	53.2	51.1	49.4
Water mass flow rate	$\dot{m}_W$	kg/h	61	82	122	161
Pressure loss. water side	Δp_W	kPa	1.5	2.6	5.6	9.3
Heat recovery (WRG)	$\dot{Q}_{WRG}$	W	201	356	481	596
Heating power total	$\dot{Q}_H$	**W**	**910**	**1313**	**1905**	**2472**
Useful heating power	$\dot{Q}_{H,\,nutz}$	**W**	**588**	**669**	**940**	**1186**

[2)] Approximation in acc. with VDI 2081

emcovent UZA (length 1250 mm) – dimensioning examples

Basic conditions: building/room type T [s] according to VDI 2081 (individual office)						
Room data	**Unit**	**Value**	**Climate data, winter (heating)**	**Symbol**	**Unit**	**Value**
Height	m	3.00	Flow temperature	t_V	°C	**55**
Width	m	5.00	Return temperature	t_R	°C	**45**
Depth	m	4.00	Room air temperature	t_{IDA}	°C	20
Surface area	m²	20	Air inlet temperature, external air	t_{ODA}	°C	–12
Volume	m³	60				
Distance from sound source[1)]	m	3.00	[1)] Direction factor Q=4 (sphere quadrant)			

The following values can be derived on the basis of the specified building and climate parameters:

2- and 4-pipe system	**Symbol**	**Unit**	**External air operation**			
Air volume flow	$\dot{V}$	**m³/h**	**30**	**60**	**90**	**120**
Sound power level[2]	L_{WA}	dB(A)	27	30	38	45
125 Hz	L_{W125}	dB	33	36	43	50
250 Hz	L_{W250}	dB	24	32	40	47
500 Hz	L_{W500}	dB	22	30	37	40
1000 Hz	L_{W1000}	dB	14	23	31	38
2000 Hz	L_{W2000}	dB	8	18	27	35
4000 Hz	L_{W4000}	dB	20	13	17	25
8000 Hz	L_{W8000}	dB	23	15	14	17
Sound pressure level[2)]	L_{PA}	dB(A)	20	24	32	39
Power consumption	p_{el}	W	5	11	18	26
2-pipe system	**Symbol**	**Unit**	**External air operation**			
Supply air temperature	t_{SUP}	°C	73.1	52.8	50.6	48.5
Water mass flow rate	$\dot{m}_W$	kg/h	56	81	121	158
Pressure loss. water side	Δp_W	kPa	1.9	3.8	7.9	13
Heat recovery (WRG)	$\dot{Q}_{WRG}$	W	201	356	481	596
Heating power total	$\dot{Q}_H$	**W**	**856**	**1304**	**1890**	**2436**
Useful heating power	$\dot{Q}_{H, nutz}$	**W**	**535**	**661**	**925**	**1149**
4-pipe system	**Symbol**	**Unit**	**External air operation**			
Supply air temperature	t_{SUP}	°C	53.6	38.7	36.6	34.8
Water mass flow rate	$\dot{m}_W$	kg/h	39	57	85	110
Pressure loss. water side	Δp_W	kPa	0.7	1.4	2.9	4.8
Heat recovery (WRG)	$\dot{Q}_{WRG}$	W	201	356	481	596
Heating power total	$\dot{Q}_H$	**W**	**660**	**1020**	**1467**	**1884**
Useful heating power	$\dot{Q}_{H, nutz}$	**W**	**338**	**376**	**502**	**597**

emcovent UZA (length 1250 mm) – dimensioning examples

Basic conditions: building/room type T [s] according to VDI 2081 (individual office)						
Room data	**Unit**	**Value**	**Climate data, winter (heating)**	**Symbol**	**Unit**	**Value**
Height	m	3.00	Flow temperature	t_V	°C	**45**
Width	m	5.00	Return temperature	t_R	°C	**35**
Depth	m	4.00	Room air temperature	t_{IDA}	°C	20
Surface area	m²	20	Air inlet temperature, external air	t_{ODA}	°C	–12
Volume	m³	60				
Distance from sound source[1)]	m	3.00	[1)] Direction factor Q=4 (sphere quadrant)			

The following values can be derived on the basis of the specified building and climate parameters:

2- and 4-pipe system	**Symbol**	**Unit**	**External air operation**			
Air volume flow	$\dot{V}$	**m³/h**	**30**	**60**	**90**	**120**
Sound power level[2]	L_{WA}	dB(A)	27	30	38	45
125 Hz	L_{W125}	dB	33	36	43	50
250 Hz	L_{W250}	dB	24	32	40	47
500 Hz	L_{W500}	dB	22	30	37	40
1000 Hz	L_{W1000}	dB	14	23	31	38
2000 Hz	L_{W2000}	dB	8	18	27	35
4000 Hz	L_{W4000}	dB	20	13	17	25
8000 Hz	L_{W8000}	dB	23	15	14	17
Sound pressure level[2)]	L_{PA}	dB(A)	24	24	32	39
Power consumption	p_{el}	W	5	11	18	26
2-pipe system	**Symbol**	**Unit**	**External air operation**			
Supply air temperature	t_{SUP}	°C	60.4	45	42.8	40.7
Water mass flow rate	$\dot{m}_W$	kg/h	90	136	201	262
Pressure loss. water side	Δp_W	kPa	4.6	9.9	20.7	33.9
Heat recovery (WRG)	$\dot{Q}_{WRG}$	W	201	356	481	596
Heating power total	$\dot{Q}_H$	**W**	**728**	**1146**	**1655**	**2122**
Useful heating power	$\dot{Q}_{H,\,nutz}$	**W**	**407**	**503**	**690**	**835**
4-pipe system	**Symbol**	**Unit**	**External air operation**			
Supply air temperature	t_{SUP}	°C	44.7	33.2	31.2	29.4
Water mass flow rate	$\dot{m}_W$	kg/h	63	95	141	183
Pressure loss. water side	Δp_W	kPa	1.7	3.6	7.6	12.4
Heat recovery (WRG)	$\dot{Q}_{WRG}$	W	201	356	481	596
Heating power total	$\dot{Q}_H$	**W**	**570**	**909**	**1303**	**1664**
Useful heating power	$\dot{Q}_{H,\,nutz}$	**W**	**249**	**265**	**337**	**377**

[2)] Approximation in acc. with VDI 2081

Project: Office building "Hafenklang", Hamburg (Germany)

Version key

	Charac.
3 = emcovent	1
UZA0 = UZA	2 - 5
4 = 4-pipe system	
2 = 2-pipe system	6
1250 = 1250 mm length	7 - 10
230 = 230 mm height	11 - 13
A = water connection at front side, on left	
C = water connection at room side, on left	14
A = without water connection piping preinstalled at factory	
B = with fixed connection (TVU), without actuator	
F = with fixed connection (TVU), with 24 V actuator	15
624 = rolling foot grid model 624, material: aluminium, height 18 mm	
616 = rolling foot grid model 616, material aluminium, 55% free cross-section, height 22 mm) constr. height + 4 mm	
617 = rolling foot grid model 617, material aluminium, 70% free cross-section, height 22 mm) constr. height + 4 mm	
632 = linear grid model 632 (material aluminium, 57% free cross-section, height 18 mm)	
860 = rolling foot grid model 860, (stainless steel V2A (material no. 1.4301), 70% free cross-section, height 18 mm)	
950 = rolling foot grid model 950, (material wood, 55% free cross-section, height 22 mm) constr. height + 4 mm	
951 = rolling foot grid model 951, (material wood, 62% free cross-section, height 27 mm) constr. height + 9 mm	16 - 18
A1 = cover grating anodised in natural colour (E6/C0) models 616, 617, 624, 632 only	
B1 = anodised in bronze colour (E6/C33) models 616, 617, 624, 632 only	
M1 = anodised in brass colour (E6/EV3) models 616, 617, 624, 632 only	
S1 = anodised in black (E6/C35) models 616, 617, 624, 632 only	
E1 = anodised in stainless steel colour, (E2/C31) models 616, 617, 624, 632 only	
E0 = stainless steel untreated model 860 only	
J2 = maple, natural (oil-treated) model 950, 951 only	
J1 = maple, natural (varnished) model 950, 951 only	
K2 = beech, natural (oil-treated) model 950, 951 only	
K1 = beech, natural (varnished) model 950, 951 only	
H2 = oak, natural (oil-treated) model 950, 951 only	
H1 = oak, natural (varnished), model 950, 951 only	
I2 = mahogany, natural (oil-treated) model 950, 951 only	
I1 = mahogany, natural (varnished) model 950, 951 only	
L2 = merbau, natural (oil-treated) model 950, 951 only	
L1 = merbau, natural (varnished) model 950, 951 only	19 - 20
A1 = panel frame, anodised in natural colour (E6/C0)	
M1 = panel frame, anodised in brass colour (E6/EV3)	
B1 = panel frame, anodised in bronze colour (E6/C33)	
S1 = panel frame, anodised in black (E6/C35)	
E1 = panel frame, anodised in stainless steel colour (E2/C31)	21 - 22
0 = without impact sound insulation (TSD)	
1 = impact sound insulation affixed over entire area, 4 mm, made from polythene (in acc. with DIN 4109)	23
0 = without installation protection cover (MSA)	
1 = with installation protection cover (MSA)	24
1 = individual item	
2 = start of row	
3 = middle of row	
4 = end of row	25

E9 = junction box

E6 = emcoMFC-G 26 - 27

Product group (3 = emcovent)	Model designation	Function	Duct lenght in mm	Structural height in mm	Water connection	Fixed connection preinstalled	Cover grating model	Cover grating surface	Panel frame surface	Impact sound insulation (TSD)	Installation protection cover (MSA)	Arrangement	Electrical connection	
3	UZA0	4	1250	230	A	A	624	A1	A1	0	0	1	E9	= Example

Prices on request !

Heating

Cooling

Heat recovery

Sekundary air (SEC)

Supply air (SUP)

Exhaust air (ETA)

emcovent model UZAS
ventilation unit for floor installation.
Decentralised ventilation unit for floor installation, for heating, cooling and forced convection ventilation with heat recovery.

Description
The emcovent UZAS is a ventilation unit for floor installation that offers the following functions:

- Supply air (SUP)
- Exhaust air (ETA)
- Secondary air (SEC)
- Heat recovery
- Heating
- Cooling

The highly compact design of the emcovent UZAS allows it to be integrated into the building structure with ease. A grid width of 345 mm in the visible area makes the unit the ideal choice even in buildings with high architectural demands. Thanks to the cover grid, simple maintenance tasks such as filter replacement can be performed without any problems.

For more extensive maintenance work, all components can be accessed with ease via an inspection cover in the floor area.
Special insulation material conforming to VDI 6022 creates optimum thermal and sound insulation.
The heat recovery unit reduces the amount of additional energy required for room temperature control to the absolute minimum.
If you are working with the heat recovery unit and there is a large difference in temperature between the external air and the air in the room, a stainless steel condensate trough is used to catch any condensate.
If required, this can then be discharged via a condensate drain.
An integrated heat exchanger (2- or 4-pipe system) conditions the room air and supplies air to the room whilst taking acoustic and comfort requirements into consideration. The external and exhaust air volume flow of up to 120 m³/h (supply and exhaust air) is achieved by means of two EC radial fans that are linked from a control perspective. Sequential activation of the integrated secondary air fan in relation to the room air temperature setpoint allows the useful thermal power that is supplied to the room to be increased several times over.
The unit is controlled by the integrated emco MFC control unit. This is responsible for all room temperature control tasks and, thanks to the option of activating additional systems (e.g. component activation), enables energy-efficient operation through-out the entire system.
For the visible area of the unit, a linear grid or roll-up grid cover is available to choose from (see also planning manual 2.2.0 'emco Grids').

Connection to emcoMFC
The emcovent UZAS models can be controlled using an emcoMFC series multifunction controller. Accordingly, they are easy to integrate into the efficient emco comfort air conditioning system, which supports customisable programming. In the context of project solutions, emco recommends the emcoMFC control system for this convector.

emcovent UZAS - Method of operation

Application areas

Decentralised floor ventilation units are ideally suited to areas with high demands in terms of room air quality and thermal comfort.

- Offices and administration rooms
- Business premises
- Reception areas and foyers
- Exhibition rooms
- Rooms requiring external air
- Rooms where windows cannot be opened
- Rooms whose appearance and layout should not be disturbed by heating components

Product benefits

- Eurokonus valve connection for time-saving valve installation
- System for heating, cooling and ventilation
- High caloric output with low acoustic load
- Pleasant room climate thanks to air supply in the vicinity of the facade
- Load-bearing
- For use in false floors
- Can be adapted to suit the specific requirements of the building
- Infinitely adjustable control
- Low installation depth

Method of operation

The outdoor air (ODA) is drawn in directly via the facade and passes through a filter element (F7).
The supply air opening is closed automatically by a return spring motor when the unit is switched off (normally closed). There is a heat recovery unit located downstream of the supply air fan units, which is responsible for energy exchange between the supply and exhaust air (heat recovery ratio of up to 60 %). Air whose temperature is precontrolled using this equipment is heated or cooled by a heat exchanger, according to the room temperature that is required. The conditioned supply air (SUP) is supplied to the room via the cover grating located in the visible area of the unit.

The exhaust air (ETA) is removed from the room via the cover and purified by a coarse dust filter. Once the exhaust air has passed through the heat recovery unit, it is conveyed outdoors as outgoing air (EHA) via an exhaust air opening (with flap). The exhaust air flap performs the same functions as the supply air flap.
Additionally, depending on the required heating or cooling power, room air is drawn in by means of the integrated secondary air fan, brought to the appropriate temperature in the heat exchanger, and fed back into the room as secondary air (SEC). This significantly increases the useful power available to the room.

emcovent UZAS – dimensions

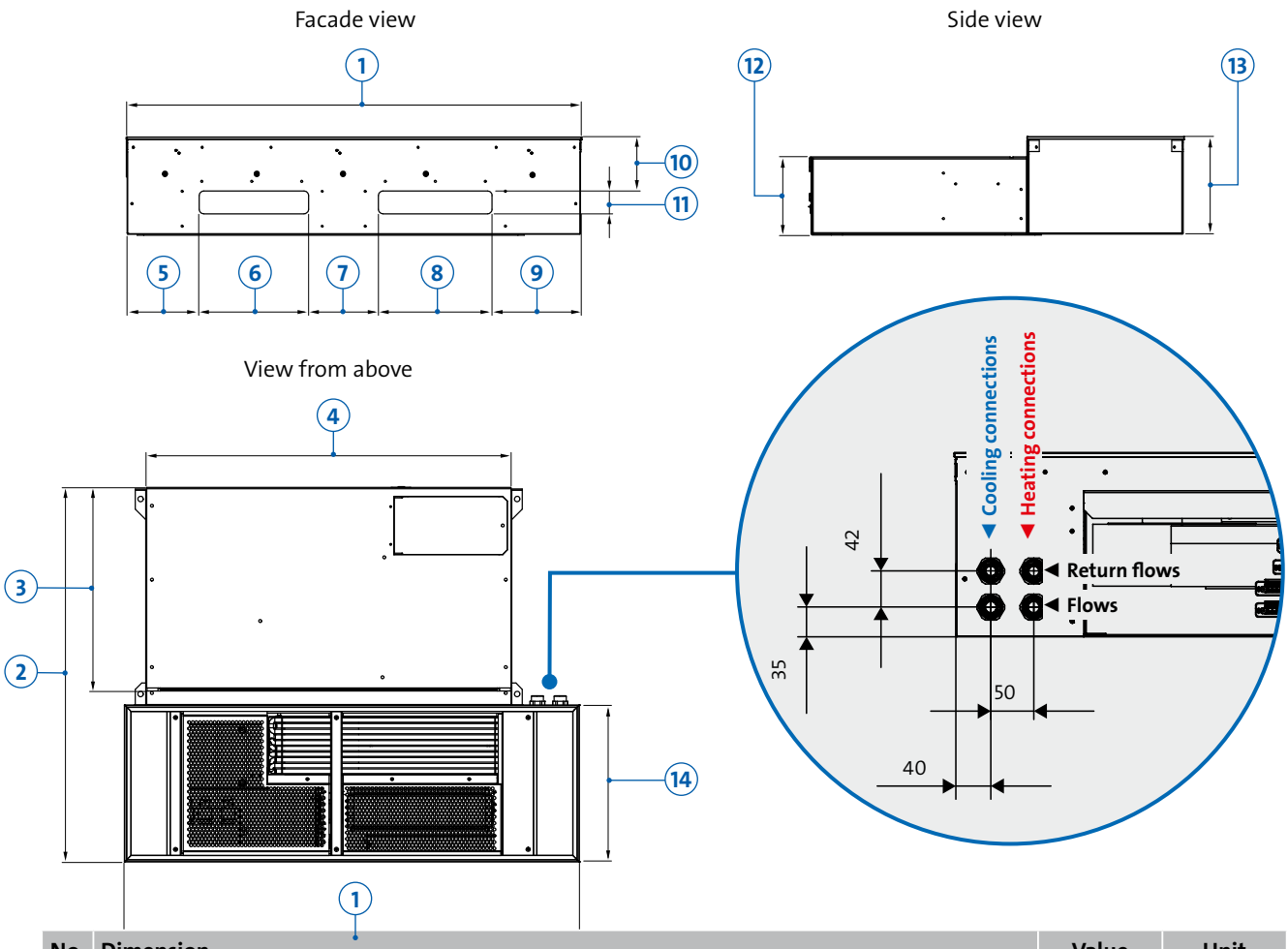

No.	Dimension	Value	Unit
1	Length of housing (visible area)	1000	mm
2	Width of entire unit	824	mm
3	Width of function unit under FFB (invisible area)	478	mm
4	Length of function unit under FFB	801	mm
5	Distance between housing and supply air opening	160	mm
6	Width of supply air opening	240	mm
7	Distance between supply air and outgoing air opening	154	mm
8	Width of outgoing air opening	250	mm
9	Distance between housing and outgoing air opening	196	mm
10	Distance from top to supply air opening/outgoing air opening	119	mm
11	Height of supply air opening/outgoing air opening	50	mm
12	Height of function unit under FFB (invisible area)	172	mm
13	Height of housing (visible area)	214	mm
14	Width of housing (visible area)	345	mm

Dimensions and position of the supply and external air connections can be individually adapted.

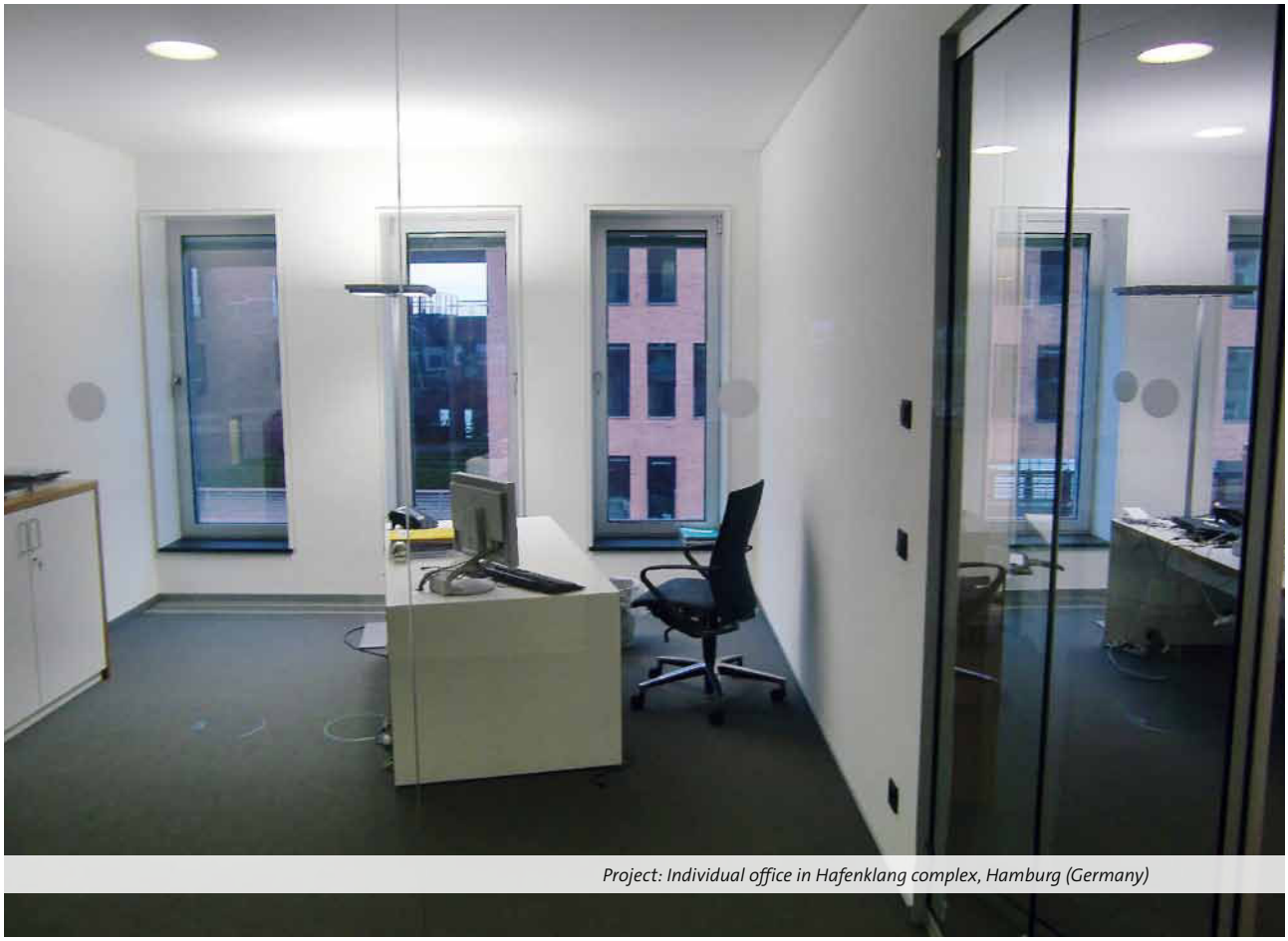

Project: Individual office in Hafenklang complex, Hamburg (Germany)

Available as an option:
Preinstalled water connection
Water connections preinstalled at the factory are available as accessories for emcotherm floor convectors. The connection set consists of:

1. Thermostat valve
   Standard TVU-E or TVU-D
   (optional: TVU-V-E or TVU-V-D)
2. Continuous actuator
   emcoMFC-Z-MS-S
3. Shutoff return screw connection
4. Connections inside tray, fully piped and leading outward (connection ¾“ AG); testing for leaks

Benefits:
- Huge time savings during installation
- Dirt cannot get into the floor tray during installation as the tray is able to remain sealed
- The media and electrical connections are supplied outside of the floor tray
- Media connections are fully tested for leaks at the factory

Available as an option:
Ready-to-use electrical version
All electrical components are pre-wired at the factory and attached to the exterior of the tray by means of screw-in connectors. The customer can carry out wiring work outside the tray easily using the mating connectors supplied.

emcovent UZAS (width 345 mm, length 1000 mm) – dimensioning examples

Basic conditions: building/room type T [s] according to VDI 2081 (individual office)						
Room data	**Unit**	**Value**	**Climate data, summer (cooling)**	**Symbol**	**Unit**	**Value**
Height	m	3.00	Flow temperature	t_V	°C	6
Width	m	5.00	Return temperature	t_R	°C	12
Depth	m	4.00	Air inlet temperature, secondary air	t_{SEC}	°C	26
Surface area	m²	20	Relative humidity, secondary air	φ_{SEC}	%	50
Volume	m³	60	Air inlet temperature, external air	t_{ODA}	°C	32
Distance from sound source[1]	m	3.00	Relative humidity, external air	φ_{ODA}	%	40

[1] Direction factor Q=4 (sphere quadrant)

The following values can be derived on the basis of the specified building and climate parameters:

2- and 4-pipe system	**Symbol**	**Unit**	**Secondary air operation**								
External air component	$\dot{V}_{ODA}$	m³/h	0	0	0	0	0	30	30	30	30
Secondary air component	$\dot{V}_{SEC}$	m³/h	32	67	104	147	187	32	67	104	147
Supply air quantity	$\dot{V}_{SUP}$	m³/h	32	67	104	147	187	62	97	134	177
Total sound power level	L_{WA}	dB(A)	22	25	33	41	48	28	29	34	41
Octave band sound power 125 Hz	L_{WA125}	dB	30	33	37	40	43	34	36	38	41
Octave band sound power 250 Hz	L_{WA250}	dB	12	23	32	39	45	22	26	32	39
Octave band sound power 500 Hz	L_{WA500}	dB	8	22	32	41	48	17	24	32	41
Octave band sound power 1000 Hz	L_{WA1000}	dB	3	16	27	36	44	7	17	27	36
Octave band sound power 2000 Hz	L_{WA2000}	dB	3	12	21	29	36	3	13	21	29
Octave band sound power 4000 Hz	L_{WA4000}	dB	8	13	17	22	25	10	14	18	22
Octave band sound power 8000 Hz	L_{WA8000}	dB	22	21	21	22	24	28	27	27	27
Sound pressure level[2]	L_{PA}	dB(A)	16	19	27	35	42	21	23	28	35
Power consumption	p_{el}	W	2	3	6	11	17	6	7	10	15
2-pipe system	**Symbol**	**Unit**	**Secondary air operation**								
Supply air temperature	t_{SUP}	°C	13	13	13	13	14	13	13	13	14
Condensate quantity	$\dot{m}_K$	l/h	0.1	0.2	0.3	0.4	0.4	0.2	0.3	0.4	0.5
Water mass flow rate	$\dot{m}_W$	l/h	28	61	92	124	147	64	94	121	148
Water-side pressure loss	Δp_W	kPa	0.0	0.4	0.9	1.5	2.0	0.4	0.9	1.4	2.0
Heat recovery	$\dot{Q}_{WRG}$	W	0	0	0	0	0	33	33	33	33
Cooling power, water side	$\dot{Q}_{K,water}$	W	194	429	647	866	1031	446	657	849	1036
Cooling power, latent	$\dot{Q}_{K,lat}$	W	57	134	198	252	279	151	214	263	299
Cooling power, total	$\dot{Q}_K$	**W**	**194**	**429**	**647**	**866**	**1031**	**479**	**690**	**882**	**1070**
Useful cooling power	$\dot{Q}_{K,nutz}$	**W**	**136**	**295**	**449**	**614**	**751**	**270**	**418**	**560**	**713**
4-pipe system	**Symbol**	**Unit**	**Secondary air operation**								
Supply air temperature	t_{SUP}	°C	13.8	13.4	13.5	14.0	14.4	13.6	13.7	14.0	14.4
Condensate quantity	$\dot{m}_K$	l/h	0.1	0.2	0.3	0.3	0.4	0.2	0.3	0.3	0.4
Water mass flow rate	$\dot{m}_W$	l/h	25	56	84	112	133	58	86	110	134
Pressure loss, water side	Δp_W	kPa	0.0	0.3	0.6	1.1	1.4	0.3	0.6	1.0	1.4
Heat recovery (WRG)	$\dot{Q}_{WRG}$	W	0	0	0	0	0	33	33	33	33
Cooling power, water side	$\dot{Q}_{K,water}$	W	176	391	588	785	930	407	599	771	937
Cooling power, latent	$\dot{Q}_{K,lat}$	W	47	112	164	204	220	129	181	218	240
Cooling power, total	$\dot{Q}_K$	**W**	**176**	**391**	**588**	**785**	**930**	**441**	**632**	**804**	**971**
Useful cooling power	$\dot{Q}_{K,nutz}$	**W**	**129**	**278**	**424**	**580**	**710**	**253**	**393**	**528**	**672**

[2] Approximation in acc. with VDI 2081

Mixed air operation. 2-pipe and 4-pipe system															
30	60	60	60	60	60	90	90	90	90	90	120	120	120	120	120
187	32	67	104	147	187	32	67	104	147	187	31	64	99	140	178
217	92	127	164	207	247	122	157	194	237	277	151	184	219	260	298
48	31	32	35	42	48	36	36	38	42	48	42	42	42	44	49
44	40	41	42	43	45	45	45	46	46	47	50	50	50	51	51
45	34	35	36	40	45	40	40	41	43	46	46	46	46	47	49
48	29	29	34	41	48	34	34	36	42	48	39	39	40	43	48
44	22	22	28	36	44	28	28	30	37	44	33	34	34	38	44
36	17	18	22	29	36	21	21	24	30	36	25	25	26	31	36
25	16	17	20	23	26	17	17	20	23	26	18	19	21	23	26
28	22	23	24	25	26	20	21	23	24	25	21	22	23	24	25
42	25	26	29	35	42	30	30	32	36	42	36	36	36	38	43
21	12	13	16	21	27	19	20	23	28	34	27	28	31	36	42
Mixed air operation. 2-pipe system															
14	13	13	14	14	15	13	14	14	15	15	14	14	15	15	16
0.5	0.4	0.4	0.5	0.5	0.5	0.5	0.5	0.6	0.6	0.5	0.6	0.6	0.6	0.6	0.5
167	97	123	147	169	184	128	151	170	187	198	155	173	188	201	207
2.5	1.0	1.5	2.0	2.6	3.0	1.6	2.1	2.6	3.1	3.4	2.2	2.7	3.1	3.5	3.7
33	67	67	67	67	67	90	90	90	90	90	112	112	112	112	112
1171	677	863	1028	1183	1286	895	1054	1190	1311	1383	1084	1211	1316	1404	1448
308	234	282	315	331	322	303	336	353	348	319	358	375	376	355	313
1204	**744**	**930**	**1094**	**1249**	**1353**	**985**	**1144**	**1281**	**1402**	**1473**	**1195**	**1322**	**1428**	**1515**	**1560**
838	**394**	**531**	**663**	**802**	**915**	**508**	**634**	**754**	**880**	**980**	**606**	**716**	**820**	**929**	**1015**
Mixed air operation. 4-pipe system															
14.9	13.8	14.0	14.4	14.9	15.4	14.2	14.5	14.9	15.4	15.9	14.6	14.9	15.3	15.8	16.3
0.4	0.3	0.4	0.4	0.4	0.4	0.4	0.5	0.5	0.4	0.4	0.5	0.5	0.5	0.5	0.4
150	88	112	133	152	165	117	137	154	168	176	141	157	170	180	184
1.8	0.7	1.1	1.4	1.8	2.1	1.1	1.5	1.8	2.2	2.3	1.6	1.9	2.2	2.4	2.5
33	67	67	67	67	67	90	90	90	90	90	112	112	112	112	112
1053	619	786	932	1067	1153	817	958	1077	1178	1233	987	1097	1187	1257	1287
238	200	237	259	262	242	258	280	286	268	229	301	308	299	267	215
1086	**686**	**853**	**999**	**1133**	**1219**	**907**	**1048**	**1167**	**1268**	**1324**	**1098**	**1209**	**1299**	**1369**	**1398**
790	**369**	**499**	**623**	**755**	**861**	**475**	**594**	**707**	**826**	**920**	**566**	**669**	**767**	**870**	**952**

emcovent UZAS (width 345 mm, length 1000 mm) – dimensioning examples

Basic conditions: building/room type T [s] according to VDI 2081 (individual office)						
Room data	**Unit**	**Value**	**Climate data, summer (cooling)**	**Symbol**	**Unit**	**Value**
Height	m	3.00	Flow temperature	t_V	°C	**10**
Width	m	5.00	Return temperature	t_R	°C	**15**
Depth	m	4.00	Air inlet temperature, secondary air	t_{SEC}	°C	26
Surface area	m²	20	Relative humidity, secondary air	φ_{SEC}	%	50
Volume	m³	60	Air inlet temperature, external air	t_{ODA}	°C	32
Distance from sound source[1]	m	3.00	Relative humidity, external air	φ_{ODA}	%	40

[1] Direction factor Q=4 (sphere quadrant)

The following values can be derived on the basis of the specified building and climate parameters:

2- and 4-pipe system	**Symbol**	**Unit**	**Secondary air operation**								
External air component	$\dot{V}_{ODA}$	m³/h	0	0	0	0	0	30	30	30	30
Secondary air component	$\dot{V}_{SEC}$	m³/h	32	67	104	147	187	32	67	104	147
Supply air quantity	$\dot{V}_{SUP}$	m³/h	32	67	104	147	187	62	97	134	177
Total sound power level	L_{WA}	dB(A)	22	25	33	41	48	28	29	34	41
Octave band sound power 125 Hz	L_{WA125}	dB	30	33	37	40	43	34	36	38	41
Octave band sound power 250 Hz	L_{WA250}	dB	12	23	32	39	45	22	26	32	39
Octave band sound power 500 Hz	L_{WA500}	dB	8	22	32	41	48	17	24	32	41
Octave band sound power 1000 Hz	L_{WA1000}	dB	3	16	27	36	44	7	17	27	36
Octave band sound power 2000 Hz	L_{WA2000}	dB	3	12	21	29	36	3	13	21	29
Octave band sound power 4000 Hz	L_{WA4000}	dB	8	13	17	22	25	10	14	18	22
Octave band sound power 8000 Hz	L_{WA8000}	dB	22	21	21	22	24	28	27	27	27
Sound pressure level[2]	L_{PA}	dB(A)	16	19	27	35	42	21	23	28	35
Power consumption	p_{el}	W	2	3	6	11	17	6	7	10	15
2-pipe system	**Symbol**	**Unit**	**Secondary air operation**								
Supply air temperature	t_{SUP}	°C	15.7	15.3	15.5	15.8	16.2	15.5	15.6	15.8	16.2
Condensate quantity	$\dot{m}_K$	l/h	0.0	0.1	0.1	0.1	0.1	0.1	0.2	0.2	0.2
Water mass flow rate	$\dot{m}_W$	l/h	22	49	73	96	112	53	77	98	116
Water-side pressure loss	Δp_W	kPa	0.0	0.3	0.6	0.9	1.2	0.3	0.6	1.0	1.3
Heat recovery	$\dot{Q}_{WRG}$	W	0	0	0	0	0	33	33	33	33
Cooling power, water side	$\dot{Q}_{K,water}$	W	126	285	427	562	654	311	450	569	676
Cooling power, latent	$\dot{Q}_{K,lat}$	W	17	50	69	71	54	72	92	98	83
Cooling power, total	$\dot{Q}_K$	**W**	**126**	**285**	**427**	**562**	**654**	**345**	**483**	**602**	**709**
Useful cooling power	$\dot{Q}_{K,nutz}$	**W**	**109**	**235**	**358**	**490**	**600**	**214**	**332**	**446**	**568**
4-pipe system	**Symbol**	**Unit**	**Secondary air operation**								
Supply air temperature	t_{SUP}	°C	16.3	15.9	16.1	16.4	16.7	16.2	16.2	16.4	16.8
Condensate quantity	$\dot{m}_K$	l/h	0.0	0.1	0.1	0.1	0.0	0.1	0.1	0.1	0.1
Water mass flow rate	$\dot{m}_W$	l/h	19	43	64	84	98	48	68	86	101
Pressure loss, water side	Δp_W	kPa	0.0	0.2	0.4	0.6	0.8	0.2	0.4	0.7	0.9
Heat recovery (WRG)	$\dot{Q}_{WRG}$	W	0	0	0	0	0	33	33	33	33
Cooling power, water side	$\dot{Q}_{K,water}$	W	111	252	376	492	569	278	399	501	590
Cooling power, latent	$\dot{Q}_{K,lat}$	W	8	30	38	28	0	52	61	56	30
Cooling power, total	$\dot{Q}_K$	**W**	**111**	**252**	**376**	**492**	**569**	**311**	**432**	**535**	**623**
Useful cooling power	$\dot{Q}_{K,nutz}$	**W**	**103**	**222**	**338**	**463**	**569**	**201**	**312**	**420**	**535**

[2] Approximation in acc. with VDI 2081

Mixed air operation. 2-pipe and 4-pipe system															
30	60	60	60	60	60	90	90	90	90	90	120	120	120	120	120
187	32	67	104	147	187	32	67	104	147	187	31	64	99	140	178
217	92	127	164	207	247	122	157	194	237	277	151	184	219	260	298
48	31	32	35	42	48	36	36	38	42	48	42	42	42	44	49
44	40	41	42	43	45	45	45	46	46	47	50	50	50	51	51
45	34	35	36	40	45	40	40	41	43	46	46	46	46	47	49
48	29	29	34	41	48	34	34	36	42	48	39	39	40	43	48
44	22	22	28	36	44	28	28	30	37	44	33	34	34	38	44
36	17	18	22	29	36	21	21	24	30	36	25	25	26	31	36
25	16	17	20	23	26	17	17	20	23	26	18	19	21	23	26
28	22	23	24	25	26	20	21	23	24	25	21	22	23	24	25
42	25	26	29	35	42	30	30	32	36	42	36	36	36	38	43
21	12	13	16	21	27	19	20	23	28	34	27	28	31	36	42
Mixed air operation. 2-pipe system															
16.6	15.7	15.9	16.2	16.6	17.0	16.0	16.3	16.6	17.0	17.4	16.3	16.6	17.0	17.4	17.8
0.1	0.2	0.2	0.2	0.2	0.1	0.3	0.2	0.2	0.1	0.1	0.3	0.3	0.2	0.1	0.0
127	82	102	118	132	139	109	125	137	145	148	132	143	151	155	158
1.6	0.7	1.1	1.4	1.7	1.8	1.2	1.5	1.8	2.0	2.0	1.7	1.9	2.1	2.2	2.3
33	67	67	67	67	67	90	90	90	90	90	112	112	112	112	112
742	479	595	690	769	809	636	728	799	848	863	769	835	881	904	923
49	117	123	114	82	31	150	142	117	66	0	170	149	113	49	0
775	**546**	**662**	**757**	**836**	**875**	**726**	**818**	**889**	**938**	**953**	**880**	**947**	**993**	**1016**	**1035**
668	**312**	**422**	**526**	**638**	**728**	**402**	**502**	**597**	**697**	**778**	**478**	**565**	**648**	**734**	**802**
Mixed air operation. 4-pipe system															
17.1	16.4	16.5	16.8	17.2	17.5	16.7	16.9	17.2	17.6	18.0	17.0	17.3	17.6	17.9	18.3
0.0	0.1	0.1	0.1	0.1	0.0	0.2	0.2	0.1	0.0	0.0	0.2	0.2	0.1	0.0	0.0
113	73	90	104	115	126	97	110	120	127	140	117	126	132	138	150
1.1	0.5	0.7	0.9	1.1	1.3	0.8	1.0	1.2	1.3	1.6	1.1	1.3	1.4	1.5	1.8
33	67	67	67	67	67	90	90	90	90	90	112	112	112	112	112
657	427	527	607	668	737	566	643	699	739	815	682	735	767	807	872
0	85	82	62	19	0	107	89	55	0	0	117	87	42	0	0
690	**494**	**594**	**674**	**735**	**804**	**656**	**733**	**789**	**829**	**905**	**794**	**846**	**879**	**919**	**984**
632	**292**	**395**	**494**	**599**	**687**	**374**	**469**	**559**	**654**	**730**	**444**	**527**	**605**	**686**	**751**

emcovent UZAS (width 345 mm, length 1000 mm) – dimensioning examples

Basic conditions: building/room type T [s] according to VDI 2081 (individual office)						
Room data	**Unit**	**Value**	**Climate data, summer (cooling)**	**Symbol**	**Unit**	**Value**
Height	m	3.00	Flow temperature	t_V	°C	**16**
Width	m	5.00	Return temperature	t_R	°C	**18**
Depth	m	4.00	Air inlet temperature, secondary air	t_{SEC}	°C	26
Surface area	m²	20	Relative humidity, secondary air	φ_{SEC}	%	50
Volume	m³	60	Air inlet temperature, external air	t_{ODA}	°C	32
Distance from sound source[1]	m	3.00	Relative humidity, external air	φ_{ODA}	%	40

[1] Direction factor Q=4 (sphere quadrant)

The following values can be derived on the basis of the specified building and climate parameters:

2- and 4-pipe system	**Symbol**	**Unit**	**Secondary air operation**								
External air component	$\dot{V}_{ODA}$	m³/h	0	0	0	0	0	30	30	30	30
Secondary air component	$\dot{V}_{SEC}$	m³/h	32	67	104	147	187	32	67	104	147
Supply air quantity	$\dot{V}_{SUP}$	m³/h	32	67	104	147	187	62	97	134	177
Total sound power level	L_{WA}	dB(A)	22	25	33	41	48	28	29	34	41
Octave band sound power 125 Hz	L_{WA125}	dB	30	33	37	40	43	34	36	38	41
Octave band sound power 250 Hz	L_{WA250}	dB	12	23	32	39	45	22	26	32	39
Octave band sound power 500 Hz	L_{WA500}	dB	8	22	32	41	48	17	24	32	41
Octave band sound power 1000 Hz	L_{WA1000}	dB	3	16	27	36	44	7	17	27	36
Octave band sound power 2000 Hz	L_{WA2000}	dB	3	12	21	29	36	3	13	21	29
Octave band sound power 4000 Hz	L_{WA4000}	dB	8	13	17	22	25	10	14	18	22
Octave band sound power 8000 Hz	L_{WA8000}	dB	22	21	21	22	24	28	27	27	27
Sound pressure level[2]	L_{PA}	dB(A)	16	19	27	35	42	21	23	28	35
Power consumption	p_{el}	W	2	3	6	11	17	6	7	10	15
2-pipe system	**Symbol**	**Unit**	**Secondary air operation**								
Supply air temperature	t_{SUP}	°C	19.1	18.8	18.9	19.1	19.4	19.0	19.0	19.2	19.4
Condensate quantity	$\dot{m}_K$	l/h	0.0	0.0	0.0	0.0	0.0	0.0	0.0	0.0	0.0
Water mass flow rate	$\dot{m}_W$	l/h	31	68	104	142	174	72	106	139	174
Water-side pressure loss	Δp_W	kPa	0.1	0.5	1.1	1.9	2.7	0.6	1.1	1.8	2.7
Heat recovery	$\dot{Q}_{WRG}$	W	0	0	0	0	0	33	33	33	33
Cooling power, water side	$\dot{Q}_{K,water}$	W	73	159	242	331	406	168	248	324	407
Cooling power, latent	$\dot{Q}_{K,lat}$	W	0	0	0	0	0	0	0	0	0
Cooling power, total	$\dot{Q}_K$	**W**	**73**	**159**	**242**	**331**	**406**	**201**	**281**	**358**	**440**
Useful cooling power	$\dot{Q}_{K,nutz}$	**W**	**73**	**159**	**242**	**331**	**406**	**142**	**222**	**299**	**382**
4-pipe system	**Symbol**	**Unit**	**Secondary air operation**								
Supply air temperature	t_{SUP}	°C	19.5	19.2	19.3	19.5	19.8	19.5	19.5	19.6	19.8
Condensate quantity	$\dot{m}_K$	l/h	0.0	0.0	0.0	0.0	0.0	0.0	0.0	0.0	0.0
Water mass flow rate	$\dot{m}_W$	l/h	30	64	98	134	164	68	100	131	165
Pressure loss, water side	Δp_W	kPa	0.0	0.4	0.8	1.4	2.1	0.4	0.9	1.4	2.1
Heat recovery (WRG)	$\dot{Q}_{WRG}$	W	0	0	0	0	0	33	33	33	33
Cooling power, water side	$\dot{Q}_{K,water}$	W	69	150	228	313	383	158	234	306	384
Cooling power, latent	$\dot{Q}_{K,lat}$	W	0	0	0	0	0	0	0	0	0
Cooling power, total	$\dot{Q}_K$	**W**	69	150	228	313	383	**192**	**267**	**340**	**418**
Useful cooling power	$\dot{Q}_{K,nutz}$	**W**	69	150	228	313	383	**133**	**208**	**281**	**359**

[2] Approximation in acc. with VDI 2081

Mixed air operation. 2-pipe and 4-pipe system															
30	60	60	60	60	60	90	90	90	90	90	120	120	120	120	120
187	32	67	104	147	187	32	67	104	147	187	31	64	99	140	178
217	92	127	164	207	247	122	157	194	237	277	151	184	219	260	298
48	31	32	35	42	48	36	36	38	42	48	42	42	42	44	49
44	40	41	42	43	45	45	45	46	46	47	50	50	50	51	51
45	34	35	36	40	45	40	40	41	43	46	46	46	46	47	49
48	29	29	34	41	48	34	34	36	42	48	39	39	40	43	48
44	22	22	28	36	44	28	28	30	37	44	33	34	34	38	44
36	17	18	22	29	36	21	21	24	30	36	25	25	26	31	36
25	16	17	20	23	26	17	17	20	23	26	18	19	21	23	26
28	22	23	24	25	26	20	21	23	24	25	21	22	23	24	25
42	25	26	29	35	42	30	30	32	36	42	36	36	36	38	43
21	12	13	16	21	27	19	20	23	28	34	27	28	31	36	42
Mixed air operation. 2-pipe system															
19.7	19.2	19.3	19.5	19.7	20.0	19.4	19.6	19.8	20.1	20.3	19.7	19.9	20.1	20.3	20.6
0.0	0.0	0.0	0.0	0.0	0.0	0.0	0.0	0.0	0.0	0.0	0.0	0.0	0.0	0.0	0.0
203	110	142	172	204	230	149	178	206	235	258	185	210	234	259	278
3.6	1.2	1.9	2.7	3.6	4.5	2.1	2.9	3.7	4.7	5.5	3.1	3.8	4.7	5.6	6.4
33	67	67	67	67	67	90	90	90	90	90	112	112	112	112	112
474	257	331	402	477	537	349	416	480	547	601	432	491	546	604	649
0	0	0	0	0	0	0	0	0	0	0	0	0	0	0	0
508	**324**	**398**	**468**	**543**	**604**	**439**	**506**	**570**	**637**	**691**	**544**	**602**	**657**	**715**	**761**
449	**207**	**280**	**351**	**426**	**487**	**263**	**330**	**395**	**462**	**515**	**310**	**368**	**424**	**481**	**527**
Mixed air operation. 4-pipe system															
20.1	19.7	19.7	19.9	20.1	20.4	19.9	20.0	20.2	20.5	20.7	20.2	20.3	20.5	20.7	21.0
0.0	0.0	0.0	0.0	0.0	0.0	0.0	0.0	0.0	0.0	0.0	0.0	0.0	0.0	0.0	0.0
192	104	134	163	193	218	141	168	194	221	243	175	199	221	244	263
2.7	0.9	1.4	2.0	2.8	3.4	1.6	2.2	2.8	3.5	4.2	2.3	2.9	3.5	4.2	4.8
33	67	67	67	67	67	90	90	90	90	90	112	112	112	112	112
448	243	313	379	450	508	329	393	453	517	567	408	463	515	570	613
0	0	0	0	0	0	0	0	0	0	0	0	0	0	0	0
481	**310**	**379**	**446**	**517**	**574**	**419**	**483**	**544**	**607**	**658**	**520**	**575**	**627**	**682**	**725**
423	**192**	**262**	**329**	**399**	**457**	**243**	**307**	**368**	**431**	**482**	**286**	**341**	**393**	**448**	**491**

emcovent UZAS (width 345 mm, length 1000 mm) – dimensioning examples

Basic conditions: building/room type T [s] according to VDI 2081 (individual office)						
Room data	**Unit**	**Value**	**Climate data, winter (heating)**	**Symbol**	**Unit**	**Value**
Height	m	3.00	Flow temperature	t_V	°C	**75**
Width	m	5.00	Return temperature	t_R	°C	**65**
Depth	m	4.00	Air inlet temperature, secondary air	t_{SEC}	°C	20
Surface area	m²	20	Relative humidity, secondary air	φ_{SEC}	%	50
Volume	m³	60	Air inlet temperature, external air	t_{ODA}	°C	–12
Distance from sound source[1)]	m	3.00	Relative humidity, external air	φ_{ODA}	%	50

[1)] Direction factor Q=4 (sphere quadrant)

The following values can be derived on the basis of the specified building and climate parameters:

2- and 4-pipe system	**Symbol**	**Unit**	**Secondary air operation**								
External air component	$\dot{V}_{ODA}$	m³/h	0	0	0	0	0	30	30	30	30
Secondary air component	$\dot{V}_{SEC}$	m³/h	32	67	104	147	187	32	67	104	147
Supply air quantity	$\dot{V}_{SUP}$	m³/h	32	67	104	147	187	62	97	134	177
Total sound power level	L_{WA}	dB(A)	22	25	33	41	48	28	29	34	41
Sound pressure level[2)]	L_{PA}	dB(A)	16	19	27	35	42	21	23	28	35
Power consumption	p_{el}	W	2	3	6	11	17	6	7	10	15
2-pipe system	**Symbol**	**Unit**	**Secondary air operation**								
Supply air temperature	t_{SUP}	°C	59.6	58.9	58.1	57.1	56.2	59.0	58.3	57.4	56.4
Water mass flow rate	$\dot{m}_W$	l/h	37	75	114	157	195	80	117	154	195
Water-side pressure loss	Δp_W	kPa	0.1	0.6	1.3	2.3	3.3	0.7	1.3	2.2	3.4
Heat recovery	$\dot{Q}_{WRG}$	W	0	0	0	0	0	200	200	200	200
Heating power, water side	$\dot{Q}_{H,\,water}$	W	429	877	1326	1832	2271	935	1366	1797	2280
Heating power, total	$\dot{Q}_H$	**W**	**429**	**877**	**1326**	**1832**	**2271**	**1135**	**1566**	**1997**	**2480**
Useful heating power	$\dot{Q}_{H,\,nutz}$	**W**	**429**	**877**	**1326**	**1832**	**2271**	**815**	**1246**	**1677**	**2160**
4-pipe system	**Symbol**	**Unit**	**Secondary air operation**								
Supply air temperature	t_{SUP}	°C	61.7	51.1	47.2	44.6	42.9	50.9	46.8	44.5	42.5
Water mass flow rate	$\dot{m}_W$	l/h	39	60	81	104	123	66	85	104	125
Pressure loss, water side	Δp_W	kPa	0.1	0.3	0.6	0.9	1.2	0.4	0.6	0.9	1.3
Heat recovery (WRG)	$\dot{Q}_{WRG}$	W	0	0	0	0	0	200	200	200	200
Heating power, water side	$\dot{Q}_{H,\,water}$	W	452	700	946	1214	1434	765	991	1217	1459
Heating power, total	$\dot{Q}_H$	**W**	**452**	**700**	**946**	**1214**	**1434**	**965**	**1191**	**1417**	**1659**
Useful heating power	$\dot{Q}_{H,\,nutz}$	**W**	**452**	**700**	**946**	**1214**	**1434**	**645**	**871**	**1097**	**1339**

[2)] Approximation in acc. with VDI 2081

Mixed air operation. 2-pipe and 4-pipe system															
30	60	60	60	60	60	90	90	90	90	90	120	120	120	120	120
187	32	67	104	147	187	32	67	104	147	187	31	64	99	140	178
217	92	127	164	207	247	122	157	194	237	277	151	184	219	260	298
48	31	32	35	42	48	36	36	38	42	48	42	42	42	44	49
42	25	26	29	35	42	30	30	32	36	42	36	36	36	38	43
21	12	13	16	21	27	19	20	23	28	34	27	28	31	36	42
Mixed air operation. 2-pipe system															
55.4	58.1	57.4	56.6	55.5	54.6	56.7	56.1	55.4	54.4	53.5	55.4	54.9	54.2	53.4	52.5
231	122	157	193	232	266	165	199	233	270	302	206	237	267	301	330
4.6	1.4	2.3	3.3	4.6	5.9	2.5	3.5	4.6	6.1	7.4	3.7	4.8	5.9	7.4	8.8
200	400	400	400	400	400	542	542	542	542	542	671	671	671	671	671
2698	1418	1833	2246	2706	3103	1923	2321	2715	3152	3526	2398	2760	3118	3515	3854
2898	**1818**	**2234**	**2646**	**3107**	**3503**	**2464**	**2863**	**3257**	**3694**	**4068**	**3068**	**3431**	**3789**	**4186**	**4525**
2578	**1178**	**1594**	**2006**	**2467**	**2863**	**1504**	**1903**	**2297**	**2734**	**3108**	**1788**	**2151**	**2509**	**2906**	**3245**
Mixed air operation. 4-pipe system															
41.0	46.0	43.8	42.3	40.7	39.3	42.2	41.0	39.9	38.5	37.3	39.5	38.7	37.8	36.7	35.5
141	89	108	125	144	158	114	131	147	162	173	137	151	164	177	185
1.6	0.7	1.0	1.3	1.6	1.9	1.1	1.4	1.7	2.0	2.3	1.5	1.8	2.1	2.4	2.6
200	400	400	400	400	400	542	542	542	542	542	671	671	671	671	671
1650	1043	1256	1462	1676	1839	1330	1526	1710	1893	2022	1593	1762	1915	2062	2158
1851	**1443**	**1656**	**1863**	**2077**	**2239**	**1872**	**2068**	**2252**	**2435**	**2564**	**2264**	**2432**	**2586**	**2732**	**2829**
1531	**803**	**1016**	**1223**	**1437**	**1599**	**912**	**1108**	**1292**	**1475**	**1604**	**984**	**1152**	**1306**	**1452**	**1549**

emcovent UZAS (width 345 mm, length 1000 mm) – dimensioning examples

Basic conditions: building/room type T [s] according to VDI 2081 (individual office)						
Room data	**Unit**	**Value**	**Climate data, winter (heating)**	**Symbol**	**Unit**	**Value**
Height	m	3.00	Flow temperature	t_V	°C	**55**
Width	m	5.00	Return temperature	t_R	°C	**45**
Depth	m	4.00	Air inlet temperature, secondary air	t_{SEC}	°C	20
Surface area	m²	20	Relative humidity, secondary air	φ_{SEC}	%	50
Volume	m³	60	Air inlet temperature, external air	t_{ODA}	°C	–12
Distance from sound source[1]	m	3.00	Relative humidity, external air	φ_{ODA}	%	50

[1] Direction factor Q=4 (sphere quadrant)

The following values can be derived on the basis of the specified building and climate parameters:

2- and 4-pipe system	**Symbol**	**Unit**	**Secondary air operation**								
External air component	$\dot{V}_{ODA}$	m³/h	0	0	0	0	0	30	30	30	30
Secondary air component	$\dot{V}_{SEC}$	m³/h	32	67	104	147	187	32	67	104	147
Supply air quantity	$\dot{V}_{SUP}$	m³/h	32	67	104	147	187	62	97	134	177
Total sound power level	L_{WA}	dB(A)	22	25	33	41	48	28	29	34	41
Sound pressure level[2]	L_{PA}	dB(A)	16	19	27	35	42	21	23	28	35
Power consumption	p_{el}	W	2	3	6	11	17	6	7	10	15
2-pipe system	**Symbol**	**Unit**	**Secondary air operation**								
Supply air temperature	t_{SUP}	°C	43.8	43.4	42.9	42.3	41.7	43.4	43.0	42.4	41.8
Water mass flow rate	$\dot{m}_W$	l/h	22	45	68	94	117	52	74	96	121
Water-side pressure loss	Δp_W	kPa	0.0	0.2	0.5	0.9	1.3	0.3	0.6	1.0	1.4
Heat recovery	$\dot{Q}_{WRG}$	W	0	0	0	0	0	200	200	200	200
Heating power, water side	$\dot{Q}_{H,\,water}$	W	258	527	796	1099	1362	609	868	1126	1414
Heating power, total	$\dot{Q}_H$	**W**	**258**	**527**	**796**	**1099**	**1362**	**809**	**1068**	**1326**	**1614**
Useful heating power	$\dot{Q}_{H,\,nutz}$	**W**	**258**	**527**	**796**	**1099**	**1362**	**489**	**748**	**1006**	**1294**
4-pipe system	**Symbol**	**Unit**	**Secondary air operation**								
Supply air temperature	t_{SUP}	°C	45.0	38.6	36.2	34.6	33.5	38.0	35.5	34.1	33.0
Water mass flow rate	$\dot{m}_W$	l/h	23	36	48	62	72	43	54	65	76
Pressure loss, water side	Δp_W	kPa	0.0	0.1	0.2	0.3	0.5	0.2	0.3	0.4	0.5
Heat recovery (WRG)	$\dot{Q}_{WRG}$	W	0	0	0	0	0	200	200	200	200
Heating power, water side	$\dot{Q}_{H,\,water}$	W	271	418	562	718	844	496	625	753	890
Heating power, total	$\dot{Q}_H$	**W**	**271**	**418**	**562**	**718**	**844**	**696**	**825**	**953**	**1090**
Useful heating power	$\dot{Q}_{H,\,nutz}$	**W**	**271**	**418**	**562**	**718**	**844**	**376**	**505**	**633**	**770**

[2] Approximation in acc. with VDI 2081

Mixed air operation. 2-pipe and 4-pipe system															
30	60	60	60	60	60	90	90	90	90	90	120	120	120	120	120
187	32	67	104	147	187	32	67	104	147	187	31	64	99	140	178
217	92	127	164	207	247	122	157	194	237	277	151	184	219	260	298
48	31	32	35	42	48	36	36	38	42	48	42	42	42	44	49
42	25	26	29	35	42	30	30	32	36	42	36	36	36	38	43
21	12	13	16	21	27	19	20	23	28	34	27	28	31	36	42
Mixed air operation. 2-pipe system															
41.2	42.7	42.3	41.8	41.2	40.6	41.6	41.3	40.9	40.3	39.8	40.6	40.4	40.0	39.5	39.0
142	81	102	123	147	167	112	132	152	174	193	141	160	178	198	215
1.9	0.7	1.1	1.5	2.0	2.5	1.2	1.7	2.2	2.7	3.3	1.9	2.3	2.8	3.4	4.0
200	400	400	400	400	400	542	542	542	542	542	671	671	671	671	671
1662	943	1192	1438	1712	1946	1305	1543	1776	2034	2254	1648	1864	2076	2309	2507
1862	**1344**	**1593**	**1839**	**2112**	**2347**	**1846**	**2084**	**2318**	**2576**	**2796**	**2319**	**2535**	**2747**	**2980**	**3178**
1542	**704**	**953**	**1199**	**1472**	**1707**	**886**	**1124**	**1358**	**1616**	**1836**	**1039**	**1255**	**1467**	**1700**	**1898**
Mixed air operation. 4-pipe system															
32.1	34.5	33.3	32.5	31.6	30.7	31.6	31.1	30.5	29.8	29.1	29.4	29.2	28.8	28.3	27.6
85	59	69	79	89	97	77	86	94	103	108	93	101	107	114	118
0.6	0.3	0.4	0.6	0.7	0.8	0.5	0.7	0.8	0.9	1.0	0.8	0.9	1.0	1.1	1.1
200	400	400	400	400	400	542	542	542	542	542	671	671	671	671	671
997	689	808	923	1042	1130	894	1002	1102	1199	1265	1083	1174	1254	1328	1373
1197	**1089**	**1209**	**1324**	**1442**	**1530**	**1436**	**1544**	**1644**	**1741**	**1806**	**1754**	**1844**	**1925**	**1999**	**2043**
877	**449**	**569**	**684**	**802**	**890**	**476**	**584**	**684**	**781**	**846**	**474**	**564**	**645**	**719**	**763**

emcovent UZAS (width 345 mm, length 1000 mm) – dimensioning examples

Basic conditions: building/room type T [s] according to VDI 2081 (individual office)						
Room data	**Unit**	**Value**	**Climate data, winter (heating)**	**Symbol**	**Unit**	**Value**
Height	m	3.00	Flow temperature	t_V	°C	**45**
Width	m	5.00	Return temperature	t_R	°C	**40**
Depth	m	4.00	Air inlet temperature, secondary air	t_{SEC}	°C	20
Surface area	m²	20	Relative humidity, secondary air	φ_{SEC}	%	50
Volume	m³	60	Air inlet temperature, external air	t_{ODA}	°C	–12
Distance from sound source[1)]	m	3.00	Relative humidity, external air	φ_{ODA}	%	50

[1)] Direction factor Q=4 (sphere quadrant)

The following values can be derived on the basis of the specified building and climate parameters:

2- and 4-pipe system	**Symbol**	**Unit**	**Secondary air operation**								
External air component	$\dot{V}_{ODA}$	m³/h	0	0	0	0	0	30	30	30	30
Secondary air component	$\dot{V}_{SEC}$	m³/h	32	67	104	147	187	32	67	104	147
Supply air quantity	$\dot{V}_{SUP}$	m³/h	32	67	104	147	187	62	97	134	177
Total sound power level	L_{WA}	dB(A)	22	25	33	41	48	28	29	34	41
Sound pressure level[2)]	L_{PA}	dB(A)	16	19	27	35	42	21	23	28	35
Power consumption	p_{el}	W	2	3	6	11	17	6	7	10	15
2-pipe system	**Symbol**	**Unit**	**Secondary air operation**								
Supply air temperature	t_{SUP}	°C	37.9	37.6	37.2	36.7	36.3	37.6	37.2	36.8	36.3
Water mass flow rate	$\dot{m}_W$	l/h	33	68	102	141	175	83	117	150	187
Water-side pressure loss	Δp_W	kPa	0.1	0.5	1.1	1.9	2.8	0.7	1.3	2.1	3.1
Heat recovery	$\dot{Q}_{WRG}$	W	0	0	0	0	0	200	200	200	200
Heating power, water side	$\dot{Q}_{H,\,water}$	W	194	395	597	824	1021	487	681	874	1089
Heating power, total	$\dot{Q}_H$	**W**	**194**	**395**	**597**	**824**	**1021**	**687**	**881**	**1074**	**1289**
Useful heating power	$\dot{Q}_{H,\,nutz}$	**W**	**194**	**395**	**597**	**824**	**1021**	**367**	**561**	**754**	**969**
4-pipe system	**Symbol**	**Unit**	**Secondary air operation**								
Supply air temperature	t_{SUP}	°C	38.8	33.9	32.1	30.8	30.0	33.2	31.3	30.3	29.4
Water mass flow rate	$\dot{m}_W$	l/h	35	54	72	92	107	68	84	100	116
Pressure loss, water side	Δp_W	kPa	0.1	0.3	0.5	0.7	1.0	0.4	0.6	0.9	1.1
Heat recovery (WRG)	$\dot{Q}_{WRG}$	W	0	0	0	0	0	200	200	200	200
Heating power, water side	$\dot{Q}_{H,\,water}$	W	203	312	419	534	626	396	488	581	679
Heating power, total	$\dot{Q}_H$	**W**	**203**	**312**	**419**	**534**	**626**	**596**	**688**	**781**	**879**
Useful heating power	$\dot{Q}_{H,\,nutz}$	**W**	**203**	**312**	**419**	**534**	**626**	**276**	**368**	**461**	**559**

[2)] Approximation in acc. with VDI 2081

Mixed air operation. 2-pipe and 4-pipe system															
30	60	60	60	60	60	90	90	90	90	90	120	120	120	120	120
187	32	67	104	147	187	32	67	104	147	187	31	64	99	140	178
217	92	127	164	207	247	122	157	194	237	277	151	184	219	260	298
48	31	32	35	42	48	36	36	38	42	48	42	42	42	44	49
42	25	26	29	35	42	30	30	32	36	42	36	36	36	38	43
21	12	13	16	21	27	19	20	23	28	34	27	28	31	36	42
Mixed air operation. 2-pipe system															
35.9	37.0	36.7	36.3	35.8	35.4	36.0	35.8	35.5	35.1	34.6	35.0	34.9	34.7	34.3	34.0
218	131	163	195	230	259	184	214	244	277	305	234	262	289	318	343
4.1	1.7	2.4	3.3	4.5	5.6	3.0	4.0	5.0	6.3	7.5	4.7	5.7	6.8	8.2	9.4
200	400	400	400	400	400	542	542	542	542	542	671	671	671	671	671
1274	765	952	1136	1339	1513	1073	1251	1425	1616	1778	1367	1528	1685	1857	2002
1474	**1166**	**1352**	**1536**	**1740**	**1914**	**1614**	**1793**	**1967**	**2158**	**2320**	**2038**	**2199**	**2356**	**2528**	**2673**
1154	**526**	**712**	**896**	**1100**	**1274**	**654**	**833**	**1007**	**1198**	**1360**	**758**	**919**	**1076**	**1248**	**1393**
Mixed air operation. 4-pipe system															
28.7	30.2	29.4	28.8	28.2	27.6	27.7	27.4	27.1	26.6	26.1	25.6	25.6	25.5	25.1	24.8
130	95	110	124	138	149	125	138	150	162	169	153	164	173	181	186
1.4	0.8	1.0	1.3	1.5	1.7	1.3	1.5	1.8	2.0	2.2	1.8	2.1	2.3	2.5	2.6
200	400	400	400	400	400	542	542	542	542	542	671	671	671	671	671
756	557	642	724	807	868	732	807	877	943	986	894	956	1010	1057	1084
956	**957**	**1042**	**1124**	**1208**	**1269**	**1274**	**1349**	**1418**	**1484**	**1528**	**1565**	**1626**	**1680**	**1728**	**1754**
636	**317**	**402**	**484**	**568**	**629**	**314**	**389**	**458**	**524**	**568**	**285**	**346**	**400**	**448**	**474**

Version key

	Charac.
3 = emcovent	1
UZAS = UZAS	2 - 5
4 = 4-pipe system	
2 = 2-pipe system	6
1000 = 1250 mm length	7 - 10
214 = 230 mm height	11 - 13
A = water connection at front side, on left	
C = water connection at room side, on left	14
A = without water connection piping preinstalled at factory	
B = with fixed connection (TVU), without actuator	
F = with fixed connection (TVU), with 24 V actuator	15
624 = rolling foot grid model 624, material: aluminium, height 18 mm	
616 = rolling foot grid model 616, material aluminium, 55% free cross-section, height 22 mm) constr. height + 4 mm	
617 = rolling foot grid model 617, material aluminium, 70% free cross-section, height 22 mm) constr. height + 4 mm	
632 = linear grid model 632 (material aluminium, 57% free cross-section, height 18 mm)	
860 = rolling foot grid model 860, (stainless steel V2A (material no. 1.4301), 70% free cross-section, height 18 mm)	
950 = rolling foot grid model 950, (material wood, 55% free cross-section, height 22 mm) constr. height + 4 mm	
951 = rolling foot grid model 951, (material wood, 62% free cross-section, height 27 mm) constr. height + 9 mm	16 - 18
A1 = cover grating anodised in natural colour (E6/C0) models 616, 617, 624, 632 only	
B1 = anodised in bronze colour (E6/C33) models 616, 617, 624, 632 only	
M1 = anodised in brass colour (E6/EV3) models 616, 617, 624, 632 only	
S1 = anodised in black (E6/C35) models 616, 617, 624, 632 only	
E1 = anodised in stainless steel colour, (E2/C31) models 616, 617, 624, 632 only	
E0 = stainless steel untreated model 860 only	
J2 = maple, natural (oil-treated) model 950, 951 only	
J1 = maple, natural (varnished) model 950, 951 only	
K2 = beech, natural (oil-treated) model 950, 951 only	
K1 = beech, natural (varnished) model 950, 951 only	
H2 = oak, natural (oil-treated) model 950, 951 only	
H1 = oak, natural (varnished), model 950, 951 only	
I2 = mahogany, natural (oil-treated) model 950, 951 only	
I1 = mahogany, natural (varnished) model 950, 951 only	
L2 = merbau, natural (oil-treated) model 950, 951 only	
L1 = merbau, natural (varnished) model 950, 951 only	19 - 20
A1 = panel frame, anodised in natural colour (E6/C0)	
M1 = panel frame, anodised in brass colour (E6/EV3)	
B1 = panel frame, anodised in bronze colour (E6/C33)	
S1 = panel frame, anodised in black (E6/C35)	
E1 = panel frame, anodised in stainless steel colour (E2/C31)	21 - 22
0 = without impact sound insulation (TSD)	
1 = Impact sound insulation affixed over entire area, 4 mm, made from polythene (in acc. with DIN 4109)	23
0 = without installation protection cover (MSA)	
1 = with installation protection cover (MSA)	24
1 = individual item	
2 = start of row	
3 = middle of row	
4 = end of row	25

E9 = junction box

E6 = emcoMFC-G 26 - 27

Product group (3 = emcovent)	Model designation	Function	Duct lenght in mm	Structural height in mm	Water connection	Fixed connection preinstalled	Cover grating model	Cover grating surface	Panel frame surface	Impact sound insulation (TSD)	Installation protection cover (MSA)	Arrangement	Electrical connection	
3	**UZAS**	**4**	**1000**	**214**	**A**	**A**	**624**	**A1**	**A1**	**0**	**0**	**1**	**E9**	**= Example**

Prices on request !

Contents

emcovent facade ventilation unit model FLH

Model FLH

Ventilation (supply air/exhaust air/heat recovery)

Variant with air openings in the underside

emcovent FLH
Horizontal facade ventilation module with heat recovery

The emcovent FLH is a ventilation module for installing in breastwork and facades, and is impressive because of its high air capacity and low acoustic load.

It provides the following functions:

- Supply air (SUP)
- Exhaust air (EHA)
- Heat recovery

Thanks to its extremely compact design, the emcovent FLH can be integrated in a variety of settings: the window, the breastwork, the wall or the ceiling. The modular structure means that the length and depth of the module can be tailored to requirements (minimum dimensions - W x H x D: 1200 x 190 x 375 mm). The high-quality Resopal housing creates thermal separation between the external and internal areas. The heat recovery unit reduces the amount of additional energy required for room temperature control to the absolute minimum.

The emcovent FLH can be adapted to special customer design requirements using different hood variants, and also the room discharge and intake direction.
The external end of the facade lead-through can be optionally fitted with a weather protection grid or rain deflection covers. Architectural integration in the structure of buildings is unproblematic because of the wide range of design options.
If you are working with the heat recovery unit and there is a large difference in temperature between the external air and the air in the room, a stainless steel condensate trough is used to catch any condensate and lead it into the outgoing air, where it can evaporate. If necessary, the condensate can also be lead away via a condensate drain.
The structure and components of the emcovent FLH were designed on the basis of VDI 6022.
The air is filtered by an F7 filter (supply air) and a G3 filter (exhaust/outgoing air), which can be easily removed via the front panel of the module for maintenance and inspection work.

The air volume flow of up to 180 m³/h (for supply and exhaust air respectively) is achieved by means of two energysaving EC radial fans that are linked from a control perspective.

Connection to emcoMFC
The emcovent FLH models can be controlled using an emcoMFC series multifunction controller.
Accordingly, they are easy to integrate into the efficient emco comfort air conditioning system, which supports customisable programming.

emcovent basics
part 3.1.2 floor ventilation unit model UZS
part 3.1.2 floor ventilation unit model UZA
part 3.1.2 floor ventilation unit model UZAS
part 3.2.1 facade ventilation unit model FLH

Variant with air openings in the front side

Areas of application:
Decentralised breastwork units are the preferred solution for situations where natural ventilation via a window is not an option due to external factors, but energy efficient ventilation is still required.

- Offices and administration rooms
- Business rooms
- Exhibition rooms
- Rooms requiring external air
- Rooms with permanently closed windows
- Living rooms and bedrooms

Product benefits

- Different sizes available in terms of depth and length
- Modular design
- Low-maintenance and hygienic in accordance with VDI 6022
- Good sound insulation properties
- Thermal separation of internal and external areas
- Easily incorporated into the structure of buildings
- Energy efficient thanks to the use of a heat recovery unit
- High air volume flows with low acoustic load

Technical Data

Description	Value
Height [mm]	200
Width [mm]	1200
Depth [mm]	380
Sound insulation [dB] open acc. EN ISO 717-1, 140-10	$D_{n,e,w}$ 54; –; R_w 39
Operating power [V, Hz]	230, 50
Air volume [m³/h] min./ max. at Δp 0 Pa level 1/2/3/4	60/90/120/180
Soundpressure level [dB(A)] at 8 dB-room absorption, level 1 1/2/3/4	24/30/36/45
Power consumption [Watt] level 1/2/3/4	15/20/29/56
Power recovering	up to 60 %*
Reversible	yes
Surface cover (Standard)	RAL 9016 / natural anodised

*depending on operating situation

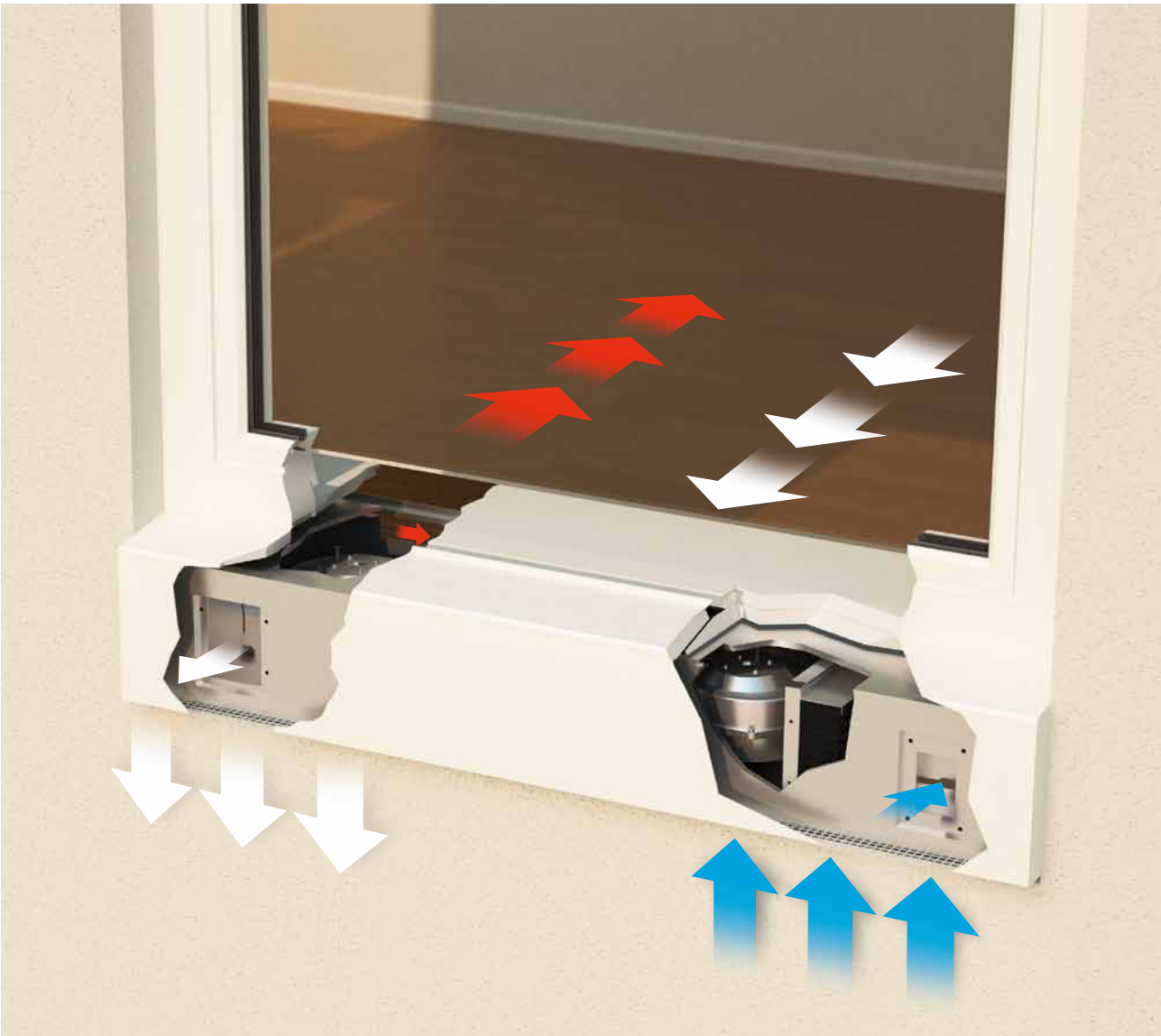

emcovent basics

part 3.1.2 floor ventilation unit model UZS

part 3.1.2 floor ventilation unit model UZA

part 3.1.2 floor ventilation unit model UZAS

part 3.2.1 facade ventilation unit model FLH

Method of operation

The external air is sucked in directly through the facade and into an opening in the module, where it passes through a filter element (F7).
The supply air opening is closed automatically by a return spring motor when the module is switched off (normally closed). The constant air volume flow is generated using volume flow-controlling EC fan units, which adapt the speed accordingly in the event of facade-side pressure fluctuations.
There is a heat recovery unit located downstream of the supply air fan units, which is responsible for energy exchange between the supply and exhaust air (heat recovery ratio of up to 60 %).
The air which has been prepared in this way is introduced into the room from the front or downwards, depending on the type of hood.
The exhaust air is also extracted from the room in accordance with the installation scenario (e.g. below the windowsill) and cleaned using a coarse particulate air filter.
Once the exhaust air has passed through the heat recovery unit, it is conveyed outdoors via an outgoing air opening.

emcovent model FLH – Dimensions

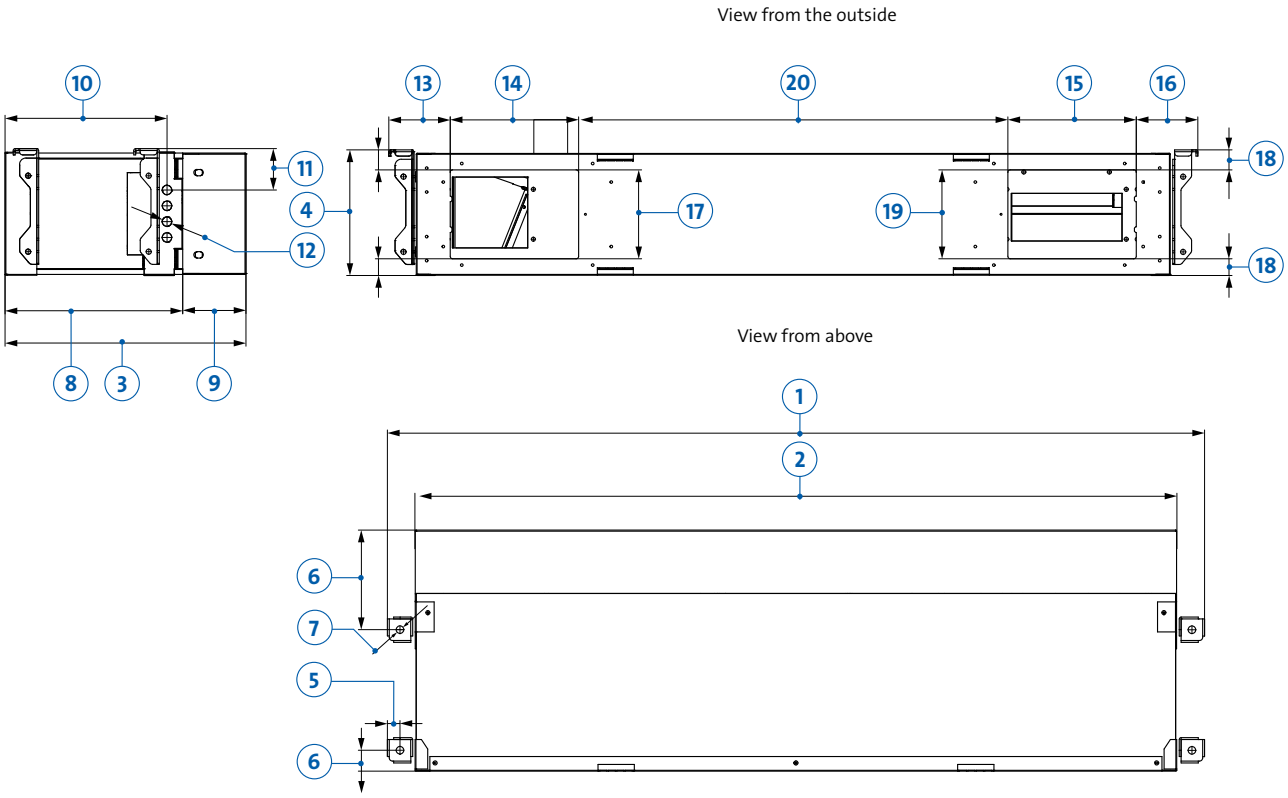

No.	Dimension		Value	Unit
1	Overall width	from	1299	mm
2	Width of housing	from	1211	mm
3	Overall depth	from	380	mm
4	Overall heigth		205	mm
5	Distance between fastening holes and side of housing		20	mm
6	Distance between fastening holes and outside of housing (2 sizes)		33/157	mm
7	Mounting hole diameter		12	mm
8	Width of frame housing in the wall		280	mm
9	Width of visible equipment covering		100	mm
10	Distance between cable leadthrough and front side of housing		255	mm
11	Distance between cable leadthrough and top of housing		65	mm
12	Diameter of cable leadthrough		15	mm
13	Distance between exhaust opening and side of housing		98	mm
14	Width of exhaust air opening		205	mm
15	Width of supply air opening		205	mm
16	Distance between supply opening and side of housing		98	mm
17	Height of exhaust air opening		142	mm
18	Distance between exhaust air opening and top and bottom of housing		32/26	mm
19	Height of supply air opening		142	mm
20	Distance between supply air opening and exhaust air opening		685	mm

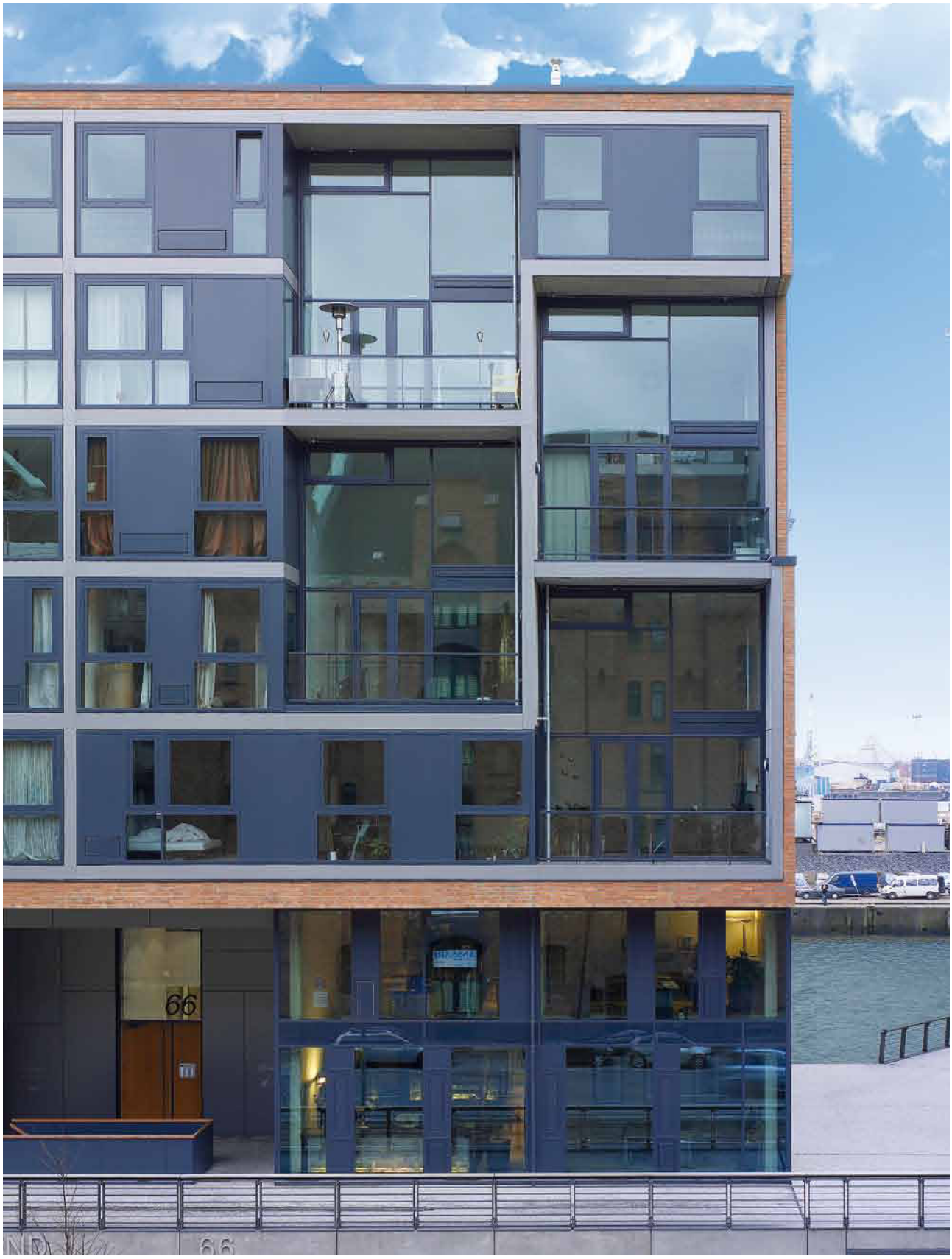

Types of installation
The emcovent FLH can be used in both the ceiling area and the breastwork underneath the windowsill.
Thanks to the variable housing depth and flexible connection options, the emcovent FLH can be integrated into virtually any facade.
In addition, there are a multitude of options for the design of the outer facade intake, which can incorporate rain deflection covers, plaster fixing angles and weather protection grids, to name but a few.
Front wall installation in the visible area is also possible with the use of a C profile, which can be included in the scope of delivery. For specific adaptations to your design, please get in touch with us.

Breastwork installation under window

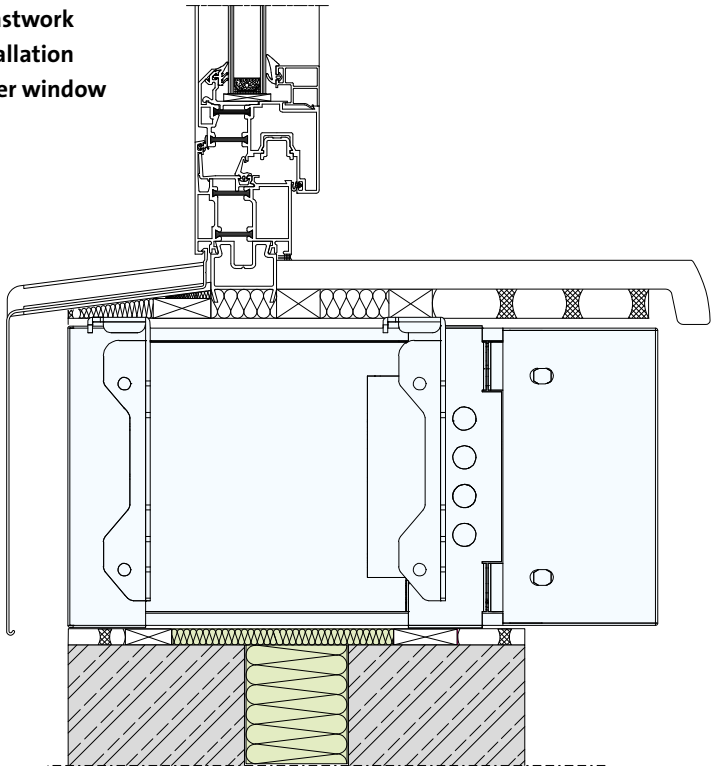

Installation above window, in front of facade, with rain deflection cover

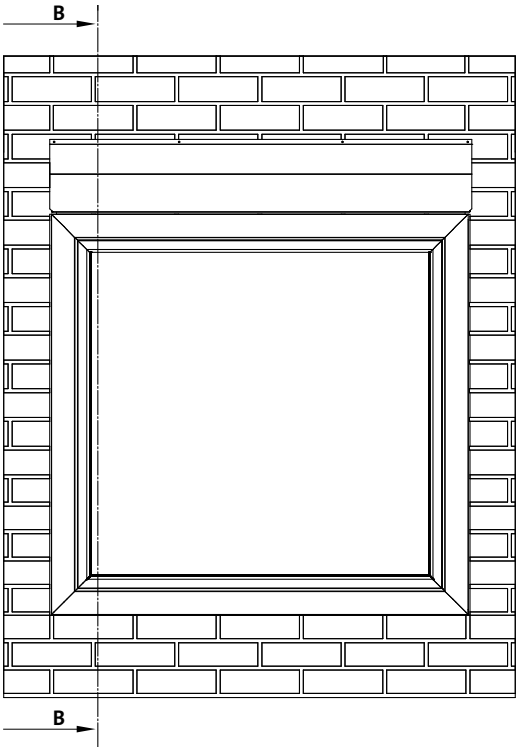

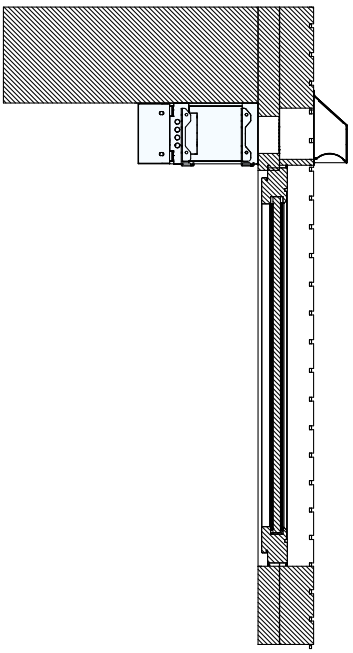

Cut B-B

In false ceiling with flexible tube and emcoair air diffuser

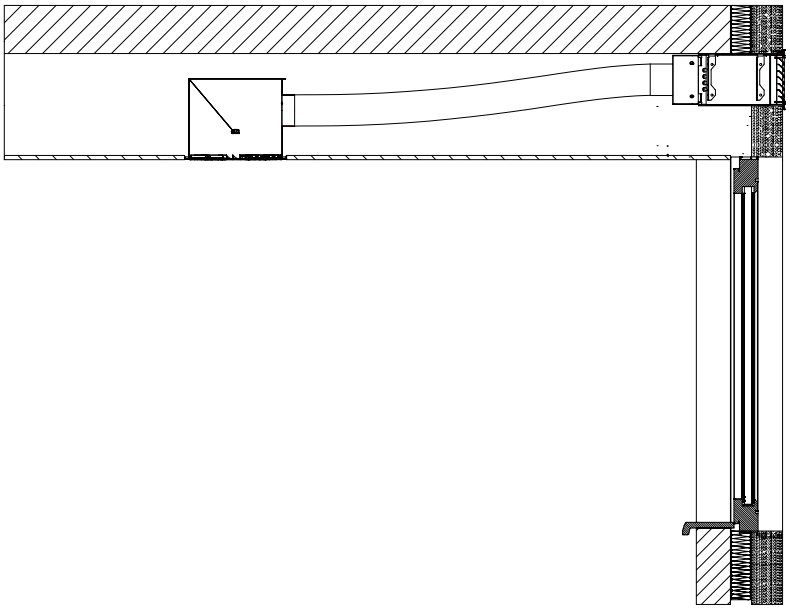

Installation above window, in front of facade, with weather protection grid

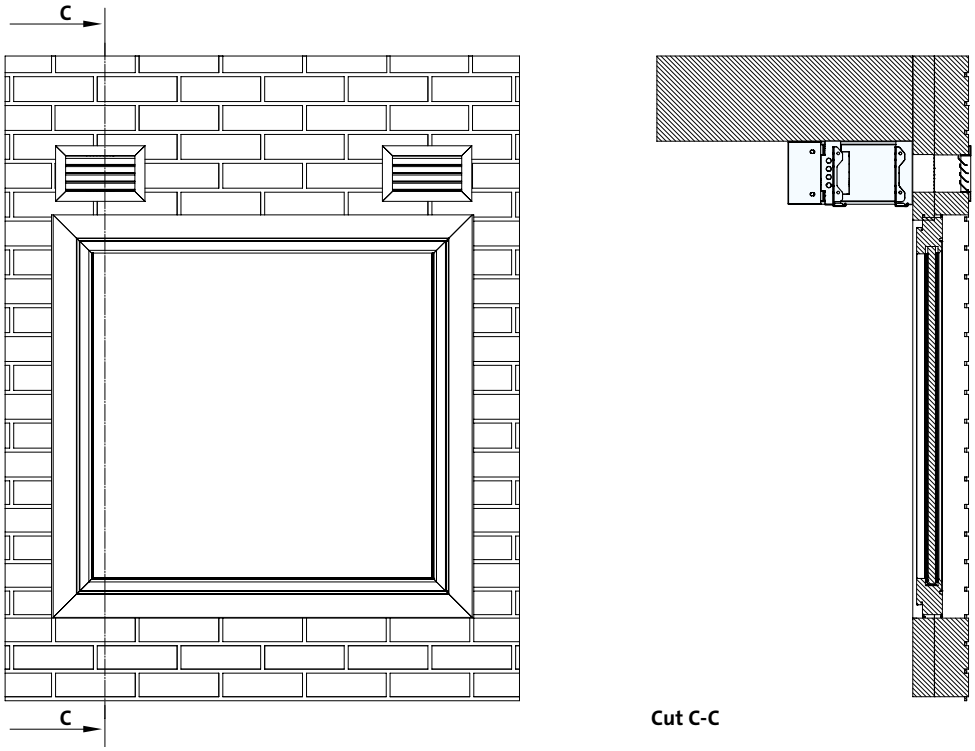

Version key

	Charac.
3 = emcovent	1
FLH = FLH Facade ventilation unit	2 - 4
B = installation housing with SK4 device holder	
0 = without frame housing	5
1 = with function unit	
0 = without function unit	6
0 = without insulation block	
1 = with insulation block	7
A = internal panel (with air openings in the underside)	
C = internal panel with current panel frame (with air openings in the underside)	
E = internal panel (with air openings in the front) with **black** air control elements, air vent direction **bottom**	
F = internal panel (with air openings in the front) with **black** air control elements, air vent direction **top**	
G = internal panel (with air openings in the front) with **white** air control elements, air vent direction **bottom**	
H = internal panel (with air openings in the front) with **white** air control elements, air vent direction **top**	
I = internal panel with connection piece (DN 125)	
0 = without internal panel	8
E5 = emcoMFC EC-B junction box with power supply (Standard)	
E4 = emcoMFC EC-B junction box without power supply	
E0 = EC junction box without power supply	9 - 10
9010 = varnished in RAL 9010, gloss polished (gloss level 75-84%)	
XXXX = varnished in RAL olour at own's option, gloss polished (gloss level 75-84%)	
0NCS = varnished in NCS colour	
00DB = varnished in DB colour	
RALP = varnished in RAL-Pearl colour	
RALG = varnished in RAL colour, gloss level different from standard	
YYYY = special surfaces	
0000 = unpainted (in case of no internal unit)	11 - 14
1 = housing cover panel for visible installation (C profile)	
0 = without cover panel	15
1 = with plenum box for weather protection grid (one-piece), made of galvanised steel	
2 = with plenum box on DN125, made of galvanised steel	
3 = with plenum box for weather protection grid (two-piece) and connecting piece, steel galvanised	
4 = with plenum box for for weather protection grid (one-piece) and connecting piece, steel galvanised	
0 = without external unit	16
0 = unpainted	
S = varnished in black colour	17
0 = without facade connection	
R = with rain deflection cover	
E = with weather protection grid model G361, one-piece	
Z = with weather protection grid model, two-piece	18
E6C0 = anodised in natural colour (E6/C0)	
9010 = varnished in RAL 9010, gloss polished (gloss level 75-84%)	
XXXX = varnished in RAL olour at own's option, gloss polished (gloss level 75-84%)	
0NCS = varnished in NCS colour	
00DB = varnished in DB colour	
RALP = varnished in RAL-Pearl colour	
RALG = varnished in RAL colour, gloss level different from standard	
YYYY = special surfaces	
0000 = unpainted (in case of no facade connection)	19 - 22

Product group (3 = emcovent)	Model designation	Housing	Function unit	Insulation block	Internal unit	Electrical connection	Internal unit surface	Housing cover panel	External unit	External unit surface	Facade connection	Facade connection surface	
3	FLH	B	1	0	A	E5	9010	1	1	0	0	E6C0	= Example

Price list

Product group emcovent model designation FLH	Housing	Function unit	Insulation block	Internal unit	Electrical connection (E5 = EC-B junction box with power supply)	Internal unit surface	Housing cover panel	External unit	External unit surface	Facade connection	Facade connection surface[1]	Price € per piece	Addition. charge for XXXX[1] **RAL colour at own's choice**	Addition. charge for 0NCS **NCS colour**[1]	Addition. charge for 00DB **DB colour** [1]	Addition. charge for RALP **RAL Pearl colour**[1]	Addition. charge for RALG[1] **RAL (gloss level different from standard**
3FLH	**B**	1	0	0	E5	0000[1]	0	0	0	0	0000	**2,570.-**	-	-	-	-	-
3FLH	**B**	0										**350.-**	-	-	-	-	-
3FLH	**0**	1										**2,220.-**	-	-	-	-	-
Internal units																	
				A		9010						**135.-**	**35.-**	**35.-**	**48.-**	**48.-**	**35.-**
				C		9010						**250.-**	**35.-**	**35.-**	**48.-**	**48.-**	**35.-**
				E		9010						**140.-**	**35.-**	**35.-**	**48.-**	**48.-**	**35.-**
				F		9010						**140.-**	**35.-**	**35.-**	**48.-**	**48.-**	**35.-**
				G		9010						**140.-**	**35.-**	**35.-**	**48.-**	**48.-**	**35.-**
				H		9010						**140.-**	**35.-**	**35.-**	**48.-**	**48.-**	**35.-**
				I		9010						**220.-**	**35.-**	**35.-**	**48.-**	**48.-**	**35.-**
External units																	
								1	0			**100.-**	-	-	-	-	-
								1	S			**135.-**	-	-	-	-	-
								2	0			**90.-**	-	-	-	-	-
								2	S			**125.-**	-	-	-	-	-
								3	0			**220.-**	-	-	-	-	-
								3	S			**255.-**	-	-	-	-	-
								4	0			**200.-**	-	-	-	-	-
								4	S			**235.-**	-	-	-	-	-
Facade connections																	
										R	9010	**141.-**	-	**48.-**	**58.-**	**58.-**	-
										E	E6C0	**148.-**	**35.-**	**48.-**	**58.-**	**58.-**	**35.-**
										Z	E6C0	**184.-**	**35.-**	**48.-**	**58.-**	**58.-**	**35.-**

Further price information –

Additional charges respectively discount charges for

- **Insulation block** in the housing,
  in case of delivery without function unit
  (**1** = with insulation block = 7. character in version key)
- **Housing cover panel** for visible installation (as-C profile)
  (**1** = with cover panel, = 15. character in version key
- **Electriscal connection**
  (E0 or E4 in version key)

Additional charges for ...	vk	Price € / unit
...insulation block	**1**	**40.-**
...housing cover panel	**1**	**72.-**

Discout charges for electrical connections...	vk	Price € / unit
... EC junction box, without power supply	**E0**	**– 90.-**
...emco MFC EC-B junction box, without power supply	**E4**	**– 30.-**
...emco MFC EC-B junction box, with power supply	**E5**	**Standard**

[1] **Note:**

When ordering RAL colour at own's option, "**XXXX**" please enter 4-digit number (= RAL colour code) in the version key, if the required gloss level is 75-84%.

For RAL colours with a different gloss level, please just enter the code "**RALG**" and specify the precise colour designation.

For NCS colours, please just enter the code "**0NCS**" and specify the precise colour designation as well.

For RAL-Pearl colours please just enter the Code "**RALP**" and specify the precise colour designation as well.

For DB-Farbton colours please just enter the Code "**00DB**" and specify the precise colour designation as well.

For special surfaces please just enter the code "**YYYY**" and specify the precise colour designation as well.

Prices for YYYY surfaces on request.

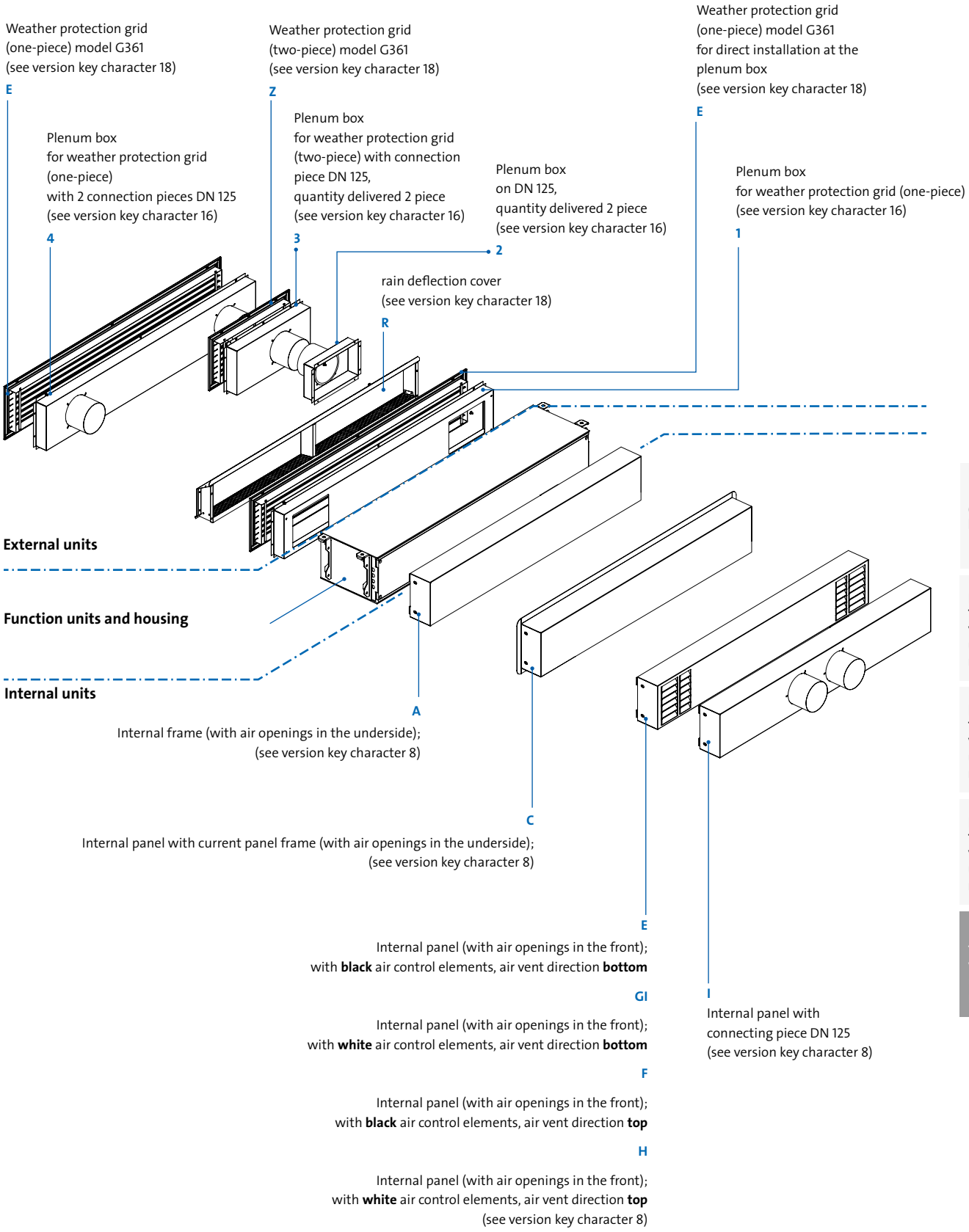
Weather protection grid
(one-piece) model G361
(see version key character 18)
E
Weather protection grid
(two-piece) model G361
(see version key character 18)
Z
Weather protection grid
(one-piece) model G361
for direct installation at the
plenum box
(see version key character 18)
E
Plenum box
for weather protection grid
(one-piece)
with 2 connection pieces DN 125
(see version key character 16)
4
Plenum box
for weather protection grid
(two-piece) with connection
piece DN 125,
quantity delivered 2 piece
(see version key character 16)
3
Plenum box
on DN 125,
quantity delivered 2 piece
(see version key character 16)
2
Plenum box
for weather protection grid (one-piece)
(see version key character 16)
1
rain deflection cover
(see version key character 18)
R
External units
Function units and housing
Internal units
A
Internal frame (with air openings in the underside);
(see version key character 8)
C
Internal panel with current panel frame (with air openings in the underside);
(see version key character 8)
E
Internal panel (with air openings in the front);
with black air control elements, air vent direction bottom
GI
Internal panel (with air openings in the front);
with white air control elements, air vent direction bottom
F
Internal panel (with air openings in the front);
with black air control elements, air vent direction top
H
Internal panel (with air openings in the front);
with white air control elements, air vent direction top
(see version key character 8)
I
Internal panel with
connecting piece DN 125
(see version key character 8)

Contents

emcotherm control technology and accessories

Product descriptions, prices

emcoMFC intelligent zone control

Analogue control

IMPORTANT NOTE:
The control products depicted in this brochure represent only the standard element of the emcoMFC product portfolio. You can find further products and information in the CONTROL TECHNOLOGY catalogue or on our website at http://www.emco-klima.com/produkte/emco-regelungstechnik.html

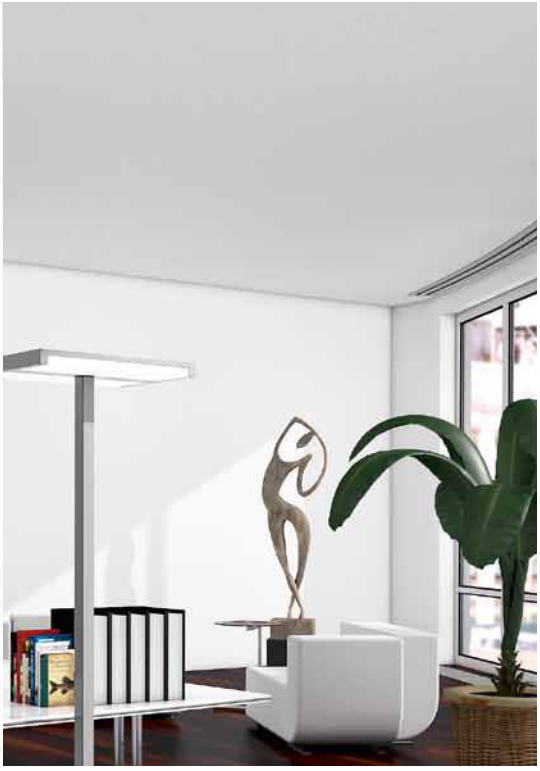

Winning comfort.

Climate zones within a building must be controlled efficiently if a feeling of well-being is to be achieved for different individuals.
In the shape of its emcoMFC product family, emco Klimatechnik is launching a range of control technology items that are perfectly tailored to specific emcotherm air conditioning components. The individual controllers form a complete system that creates maximum climate comfort with optimum energy efficiency either as an integral part of an air conditioning unit or as a separate add-on unit.

The user can select setpoints intuitively via the touch surfaces on our high-quality room operating units and have the values shown on the glass display.
In addition, interfaces at the customer end, such as window contacts, motion detectors or other floating contacts, can be connected to the controllers and easily integrated into the zone control system.

Fresh air is supplied as required by combining these products with emcoMFC sensors, such as the emcoMFC-CO2, emcoMFC-rF or emcoMFC-VOC.
A gateway may be added to a zone in order to facilitate a connection to open bus systems. All relevant data is transferred to the higher levels in bundled format, with the option to perform facility management specifically in the desired zone. In order to keep the amount of installation work required at the customer end to a minimum, all devices exchange digital information via a 4-wire emcoBUS. To this end, a 4-wire bus cable is looped through from device to device in the zone.
You can find further information about emco control concepts in the emcoMFC planning document and on our website.

Zone communication via emcoMFC components

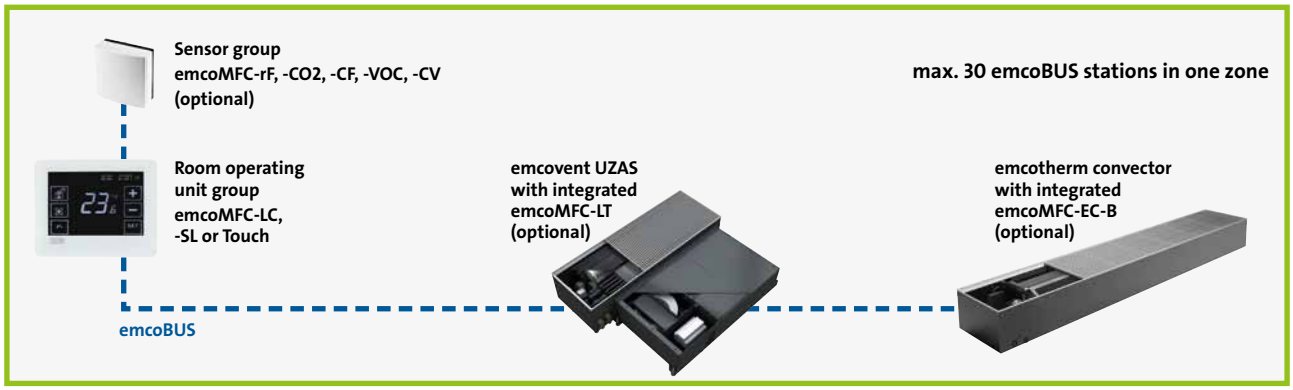

Figure 1 shows a simple zone (a room i.e.), in which the devices are connected via emcoBUS.

In this case they are controlled by CO2 and VOC sensors.

Devices and sensors are plug and play compatible and expandable without limitations.

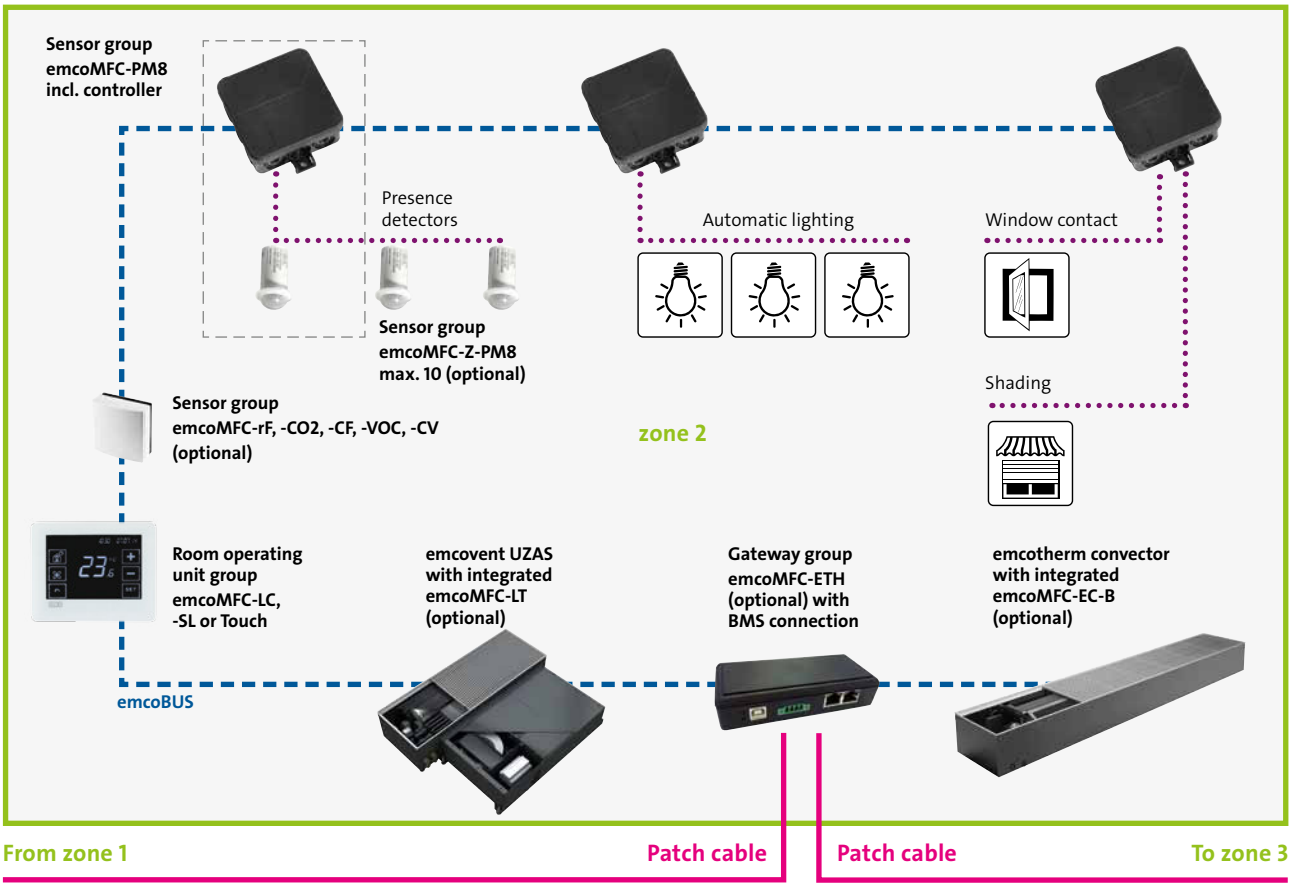

Figure 2 shows a zone with devices being connected via emcoBUS. Data is transmitted to the higher BMS unit.

Again, the devices are controlled by CO2 and VOC sensors.

The collected data of presence detector, light control, window contact switch and shading is processed and managed by emcoBUS.

Room operating unit
model emcoMFC-LC
LC = Liquid Crystal
(Product no. 6RMFCLC)

High-quality monochrome touch display with glass look and backlight, with integrated room temperature sensor.
Any conventional Windows PC can be configured with the parameters significant in the zone using the free emcoLAB-LC configurator software. These parameters can be entered via the display menu too.

Display:
Segment display b/w 4.0 inch

- **Menu flexibility:**
  Determined by segment display
- **Operation:**
  Six touch buttons
- **Dimensions (L x W x H) in mm:**
  110 x 92 x 21
  Inclination 4,5°

Order number	Price € / unit
870-4249	**160.-**

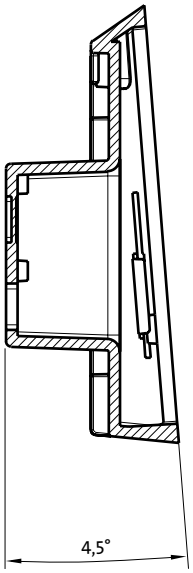

These features and technical designs apply to both room operating units:

- **Display values (can be configured):**
  – Temperature setpoint
  – Room temperature
  – External temperature
  – Fan stage
  – Presence / absence
  – Holiday
  – Hour-by-hour presence
  – Date / time
  – Time program
  – Light control ON / OFF / DIM
  – Automatic or manual mode
  – Heating / cooling
  – Key lock
  – Relative humidity in %
  – CO2 in ppm
  – VOC in ppm
  – Warning and fault signals
  – Maintenance menu for advanced / zone-specific settings
- **Installation:**
  DIN flush-mounted box
- **On-site electrical connection:**
  4-wire emcoBUS
- **Supply voltage:**
  Via emcoBus
- **Controller type:**
  Single-room controller for FLGs, convectors and decentralised ventilation modules
- **Configuration:**
  – Mini-B-USB
  – emcoBUS
  – emcoMFC-ETH
- **Communication:**
  – emcoBUS (max. 30 stations)
  – Compatible with all emcoMFC products with bus capability

Actuator model emcoMFC-EC-B
EC = electronically commutated,
B= BUS
(Product no. 6CMFCECB)

This actuator was specially developed for operation between EC convectors and the emcoBUS. It is integrated in the convectors as standard.
With the emcoBUS interface, the inputs and outputs can be integrated in the emcoBUS and thus evaluated and displayed by the room control unit.

- **Inputs:**
  – 2 x temperature detection
  – 1 x floating switching input
- **Outputs:**
  – 1 x 0-10 V analogue output
  – 3 x 24 V DC switching outputs
- **Operating voltage:**
  – Integrated in the device, 230 V/50 Hz + 4-wire emcoBUS
  – Supplied as an accessory, 24 V DC
- **Dimensions (L x W x H) in mm:**
  Black housing: 170 x 80 x 50
- **Parameterisation:**
  – emcoBUS
  – emcoMFC-ETH
- **Communication:**
  – emcoBUS (max. 30 stations)
  – Compatible with all emcoMFC products with bus capability
- **Typical applications:**
  – emcotherm EC convectors
  – Simple FLGs without temperature control
  – Dimmable lighting

emco terminal box
The emco terminal box consists of an IP54 housing and features the terminals required (depending on the application) to control the internal periphery externally and to supply it with power.

Installation housing model emcoMFC-G
without BACnet
(Product no. 6RMFCLC)

Installation housing incl. power supply and emcoMFC-LT controller (see below for description) for plugging in units and functional modules.

- **Ready-to-use inputs:**
  – 230 V/50 Hz mains
  – emcoBUS
  – 4 x external temperature detection (PT1000)
- **Ready-to-use outputs:**
  – 2 x 230 V/50 Hz mains
  – 4 x AO 0-10 V
  – 2 x 230 V/5 A switching outputs
  – 3 x 24 V DC with a total of 0.3 A

Further inputs / outputs can be defined as a special solution.
The maximum number is pre-defined by the emcoMFC-LT.

Controller model emcoMFC-LT
included in the emcoMFC-G

The emcoMFC-LT controller was designed for operation with emcoMFC products. Thanks to its range of inputs and outputs and its high level of integrated intelligence, it is able to handle advanced requirements such as protection functions (frost protection) or complex control calculations. The controller comes as standard with all emcovent decentralised ventilation systems and emcotherm convectors.

- **Inputs:**
  – 8 x temperature detection
  – 2 x 0-10 V analogue inputs
  – 4 x switching inputs
- **Outputs:**
  – 8 x 0-10 V analogue outputs
  – 12 switching outputs
- **Operating voltage:**
  – Integrated in the device, 230 V/50 Hz + 4-wire emcoBUS
  – Supplied as an accessory, 24 V DC
- **Configuration:**
  – USB
  – emcoBUS
  – emcoMFC-ETH

Typical applications
– Decentralised facade ventilation modules
– Independent room / zone controllers
– Special solutions

Motorised actuator
model emcoMFC-Z-MS-S
MS-S = motorised actuator - continuous

Order number	Price € / unit
870-1331	**102,-**

Features
The emcoMFC-Z-MS-S actuator has a two-part plastic housing in light grey (RAL 7035). The pluggable connecting cable, also light grey, is 3 x 0.35 mm². The device is fitted with a maintenance-free gear unit and a stepper motor with activation and shut-off electronics. The operating status can be monitored by means of an integrated LED lamp. The emcoMFC-Z-MS-S is well suited for retrofitting on existing systems.

Function
The motor of the emcoMFC-Z-MS-S is operated with 0-10 V and runs continuously. The direction of rotation can also be altered from anticlockwise to clockwise. In the final positions, the motor is switched off after a maximum of 2 minutes.
If the voltage is continuously available, the motor runs a complete cycle every 24 hours to prevent the cone from becoming blocked or getting stuck. The LED lamp lights up when voltage is applied to the actuator and flashes when the motor is running. When the green light remains on permanently, this means that the actuator has reached the correct position. The stroke to be travelled can be limited to between 3.2 mm, 4.3 mm and 5.5 mm.

Configuration and installation information
It is important that the actuator is protected against spray and is installed either standing vertically or lying horizontally (not suspended).
The mains voltage must be disconnected when connecting cables are being connected or replaced.
Should a power failure occur, the valve may be opened and the actuator removed. The motor must also be installed either standing vertically or lying horizontally (not suspended).

General technical data

Running time s/mm	Thrust N	Voltage	Stroke max. (mm)	Weight (kg)	Protection class	Degree of protection
13	120	24 V DC 24 V AC	6.3	0.15	IEC 60730 (Terminal cover)	IP 43

emco thermostat valve lower parts
emco thermostat valve lower parts type TVU can be used with all emcotherm convector types and are particularly well suited to high water mass flow rates.
They are proportional-action controllers that work without auxiliary power and regulate the room temperature by modifying the flow of heating water.
They allow radiator thermostat valves to be designed with a proportional control range of 1 or 2 Kelvin.
The thermostat valve lower parts fit the emco actuators. The entire valve core can be exchanged whilst the system is running by using a special tool (accessory).

emco thermostat valve lower parts with green protection cap and option to pre-set the flow range precisely
Can be used with emco convector types with low to medium water mass flow rates with option to pre-set the flow range precisely.
Recommended application range:
- Approx. 55 - 230 [kg/h] at a system deviation of 1.0 K.
- Approx. 55 - 460 [kg/h] at a system deviation of 2.0 K.

emco universal screw connections model UFV
For shutting off, filling and draining; with reproducible presetting; can be used with all emco convector types.

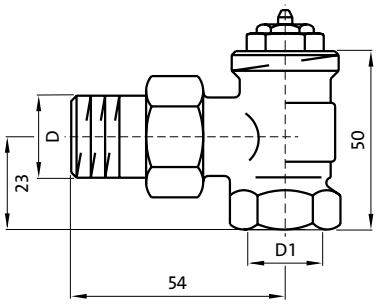

D (EN 10226) = R 1/2“, D1 (EN 10226) = Rp 1/2“

emco thermostat valve lower part model TVU-E (angle type)
Thermostat valve lower part, without flow range presetting

Order number	Price € / unit
800-4311	**19.-**

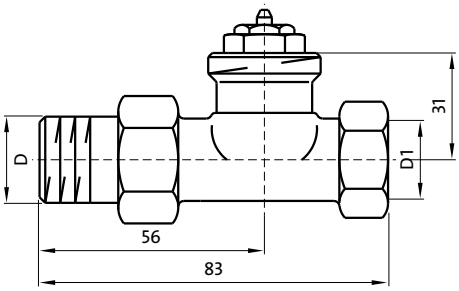

D (EN 10226) = R 1/2“, D1 (EN 10226) = Rp 1/2“

emco thermostat valve lower part model TVU-D (straight)
Thermostat valve lower part, without flow range presetting

Order number	Price € / unit
800-4312	**19.-**

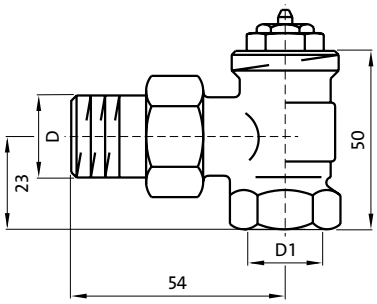

D (EN 10226) = R 1/2“, D1 (EN 10226) = Rp 1/2“

emco thermostat valve lower part model TVU-V-E (angle type)
Thermostat valve lower part, with continuous limiting and flow range presetting

Order number	Price € / unit
800-4310	**20.-**

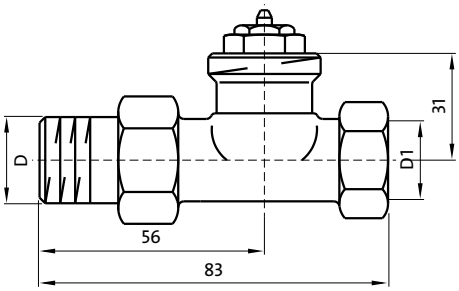

D (EN 10226) = R 1/2“, D1 (EN 10226) = Rp 1/2“

emco thermostat valve lower part model TVU-V-D (straight)
Thermostat valve lower part, with continuous limiting and flow range presetting

Order number	Price € / unit
800-4309	**20.-**

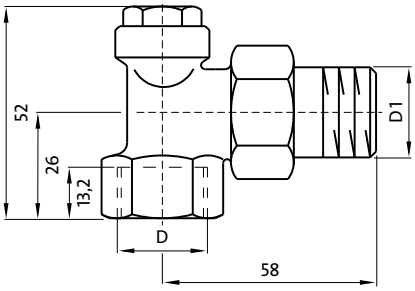

D (EN 10226) = R 1/2“, D1 (EN 10226) = Rp 1/2“

emco thermostat valve lower part model UFV-E (angle type)

Screw connection, can be shut off

Order number	Price € / unit
800-4313	**11.-**

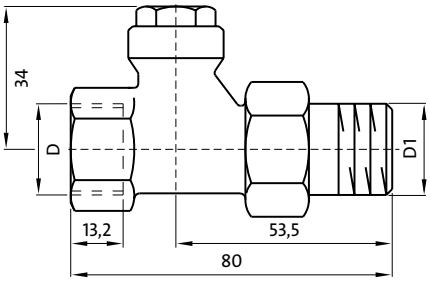

D (EN 10226) = R 1/2“, D1 (EN 10226) = Rp 1/2“

emco thermostat valve lower part model UFV-D (straight)

Screw connection, can be shut off

Order number	Price € / unit
800-4314	**11.-**

Technical data

			
	TVU-E (angle type), TVU-D (straight)	**TVU-V-E (angle type), TVU-V-D (straight)**	**UFV-E (angle type), UFV-D (straight)**
Valve housing material	Red brass		
Surface	Nickel-plated		
kvs value (m³/h)	3.50 (TVU-E), 1.80 (TVU-D)	0.90	
Nominal width	DN 15		
Connection	Rp 1/2“ female thread x R 1/2“ male thread		
Max. differential pressure	1 bar		–
Low pressure vapour	0.5 bar, 110 °C	–	–
Max. operating pressure	PN 10		
Max. operating temperature	120 °C		

General terms and conditions of sale, delivery and payment

1. Introduction: These General Terms and Conditions of Sale, Delivery and Payment shall apply exclusively unless they are amended in any express written agreement. Quotations, acceptance of quotations or sale of any goods shall be subject to these terms and conditions. Any terms and conditions of the purchaser or provisions of the purchaser that are contradictory to these terms and conditions shall, even if they are known, be rejected. These terms and conditions shall furthermore provide the basis for all future transactions. Notice pursuant to Section 33 of the Federal German Data Protection Act (BDSG): Personal data from contracts shall also be held on computer.

2. Orders and quotations: All user quotations and delivery options are subject to confirmation. Orders shall only be deemed to have been accepted if they are accepted in writing within 21 days of submission (also by invoice or delivery note). The scope of delivery shall be governed exclusively by the written order confirmation. The purchaser shall bear responsibility for the accuracy of the order. If goods need to be manufactured, processed or treated, the purchaser shall be required to make good any damage that is caused because such contractually agreed processing or treatment of the goods, carried out on the basis of the purchaser's specification, is shown to be a breach of patent, copyright, trademark or other property right of a third party.

3. Prices and pricing: Unless prices are agreed for products, the list prices, plus value-added tax, shall apply that are in effect on the day of delivery. All prices are ex-works and exclude packaging. Tolerances in quantities delivered shall be permissible if they are in a reasonable proportion to the total quantity (plus/minus 10%).

4. Delivery of goods: Deliveries shall be made ex-works for the account and at the expense of the purchaser. If goods are kept in store for the sole disposal of the purchaser (call-off items), the purchaser shall be in default if, without being reminded, it fails to take delivery of such goods within the agreed period.

5. Delivery time: The delivery dates or delivery periods stated in the order confirmation indicate the earliest possible delivery time and are without obligation. Set calendar delivery dates shall only be binding if they have been expressly confirmed in writing. Delivery periods shall commence on the day on which the order confirmation is dispatched, however not before the submission of any documents, approvals, clearances to be furnished by the purchaser or before receipt of any agreed deposit payment. The delivery period is met once the goods have left the factory or notice is given that they are ready for shipment.

6. Passing of risk: The risk of goods becoming damaged or lost shall pass to the purchaser as soon as the goods have left the user's factory, this also being the case if part shipments are made. If the user has undertaken to deliver the goods to the purchaser, the purchaser shall bear the risk of transportation even if Incoterms to the contrary are agreed. If shipment is delayed for circumstances for which the purchaser is responsible, the risk shall pass to the purchaser as from the day on which the goods are ready for shipment. Goods shall be stored on the purchaser's account and at the purchaser's risk. Items delivered must be accepted by the purchaser without prejudice to the purchaser's rights.

7. Notification of defects: It shall not be possible to give notice of defects that the purchaser could have established if care had been exercised when delivery was taken or initial sample inspection had taken place. Even if selection samples have been sent, the purchaser must inspect the goods without delay on arrival and give notice of any defects in writing or the warranty will be void. Notice of complaints must be given in writing before the goods are processed, contain an exact description of the alleged claim or flaw and be accompanied by packing slips. The quality of the goods shall be considered to have been approved if the user does not receive a written notice of defects within 7 working days of the goods arriving.

8. Warranty: The user shall not assume any responsibility for the good being suitable for a specific purpose. If the item supplied is faulty or if it lacks warranted qualities or if it becomes defective within a warranty period as a result of manufacturing or material flaws, the user shall, in its equitably exercised discretion, be able to rectify defects or make a new delivery on return of goods already delivered. If it is not possible to remedy the defect or if such would involve unreasonable effort and expense, the purchaser may only demand a reduction in payment. The purchaser shall, by way of exception, also be able to demand a reduction in payment if it cannot be reasonably expected to remedy the defect. The user must be given the opportunity to locate the defect brought to its notice. On request, complaint goods must be returned without delay. Replaced parts shall become the property of the user. The latter shall take no responsibility for inappropriate or improper use, for incorrect assembly or repair by the purchaser or third party, for natural wear, improper or negligent treatment or for improper maintenance. If rectification is made by the purchaser or any third party, the user shall not be liable for any consequences that may arise therefrom. The same shall apply to any modifications that are made to the delivery item without the user's prior consent. If, within a reasonable period, warranty obligations are not met or not met in the manner agreed, the purchaser shall be able to set a final deadline in writing. If this deadline expires without result, the purchaser shall be able to make the necessary rectification itself or place rectification in the hands of a third party. If rectification has been carried out successfully by the purchaser or a third party, all claims on the part of the purchaser shall be settled upon reimbursement of the costs incurred by it. Only the user's product description shall be considered as the agreed quality of the goods. If the purchaser receives deficient assembly instructions, the user shall only be obliged to supply assembly instructions free of any deficiency if the deficiency in the assembly instructions prevents proper assembly.

9. Restrictions on liability: If the purchaser incurs damage as a result of a delay for which the user is responsible, the purchaser shall, to the exclusion of further claims, be entitled to demand compensation for damage caused by the delay. This shall amount to 0.5 per cent for each full week, however in total no more than 5 per cent of the value of that part of the overall shipment which, on account of the delay, cannot be used in time or as agreed. If, through fault on the part of the user as a result of failing to implement or of incorrectly implementing proposals or deliberations coming about before or after entering the contract, or as a result of infringing other contractual accessory obligations – in particular, instructions on operating and maintaining the delivery item – the delivery item cannot be used by the purchaser as agreed, the arrangements set forth in clause 8 of these terms and conditions and the following arrangements shall be applicable to the exclusion of further claims. The user shall only be liable for damage, including damage not occurring on the delivery item itself, if such is caused as a result of intent, of gross negligence, of a culpable harm to life, limb and health, of defects that the user has fraudulently concealed or whose absence it has guaranteed, of defects in the delivery item insofar as product liability law provides for liability for personal injury and damage to property caused by privately used objects. Liability for each occurrence of damage - for whatever legal ground - shall be limited to an amount of 30% of the order value. Any liability above and beyond this amount shall be ruled out.

10. Acts of God: Acts of God, industrial disputes, riots, government action, delivery stoppages or other unforeseeable, unpreventable and serious events shall release the user from its obligations for the duration of the disturbance and to the extent of the effect this disturbance has. This shall also apply if these events occur at a time at which the user is in default. The user shall, to the extent reasonably expected of it, immediately provide the necessary information and adapt its obligations in good faith to the changed circumstances.

11. Terms of payment: Unless otherwise agreed, all payments shall be due in the full amount upon delivery or upon acceptance of delivery. Without further notification, the purchaser shall be in arrears 30 days after the due date if payment is not made. The user grants 3% cash discount on payments made within 7 days of the invoice date provided the purchaser is not in arrears with the settlement of accounts receivables from preceding consignments of goods at the time of payment. If payment, or also part thereof, is not received by the user within 30 days, the purchaser shall not be entitled to cash discount. Bills of exchange will only be accepted on the basis of written agreement and only on account of performance without liability for protest. The purchaser may not offset counterclaims and has no right of retention on the basis of these claims unless the purchaser's claims are undisputed or final and absolute.

12. Default in payment and deterioration in purchaser solvency: If the purchaser is in arrears with the payment of amounts invoiced for transactions already delivered, the user shall be able to make delivery of outstanding orders contingent on the settlement of due invoices or on advance payment of the purchase price or withdraw from the contract. The same right shall exist if, after entering the contract, a significant deterioration becomes known in the purchaser's financial circumstances. The agreed payment dates must still be observed even if warranty claims are put forward. In the event that the purchaser defaults in payment and composition or insolv-ency proceedings are instigated against it in or out of court, discounts granted as well as freight reimbursements shall be withdrawn. The same legal consequences shall ensue on the 31st day after the invoice becomes due.

13. Retention of title: The goods delivered by the user shall remain the user's property until it receives all payments due to it from the business relationship with the purchaser. If the purchaser acts in breach of contract, in particular if the purchaser falls into arrears, the delivery item may be repossessed; the purchaser shall undertake to surrender possession; it shall allow the user to collect and repossess its goods at any time. Repossessing a delivery item does not equate to withdrawing from the contract unless such is expressly declared in writing. In the event of attachment or other intervention by third parties, the purchaser shall be required to provide immediate notification so that opposition proceedings can be instituted to prevent execution. If the third party is not in a position to reimburse the judicial and extra-judicial costs of opposition proceedings, the purchaser shall be liable for the arising loss. The purchaser shall be entitled to resell the delivery item in the ordinary course of business. Even at this stage, the purchaser assigns to the user all claims against its buyers or third parties in the amount of the final invoice balance, including value-added tax, that arise from the resale, regardless of whether the goods have been resold without having been processed or after they have been processed. The purchaser is empowered to collect such claims even after assignment unless the user prohibits the purchaser from doing so. The user's power to collect the claim itself shall remain unaffected. The user shall, however, undertake not to collect the claim itself as long as the purchaser duly meets it payment obligations and is not in arrears.

The user shall, at all events, be able to demand that the purchaser disclose the assigned claim and its debtors, provide all information necessary for collection, hand over the associated documents and notify the debtors of the assignment. The purchaser shall only process or refashion the goods for the user. If the goods are processed with other items, the user shall acquire joint ownership of the new article in the proportion of the value of the retained goods to the other processed items at the time of processing. In all other respects, the same shall apply to the article that is created as a result of processing as applies to the retained goods. If the goods are inseparably combined with other items, the user shall acquire joint ownership of the new article in the relation of the value of the goods to the other combined items at the time of combination. If combination takes place in such a manner that the purchaser's article must be regarded as the primary article, it shall be considered as agreed that the purchaser will assign proportional joint ownership to the user. The purchaser preserves sole ownership or joint ownership. The purchaser shall assign any claim to security accruing to it against any third party as a result of combining the goods with a piece of land.

14. Resale clause: The goods supplied may only be exported to those countries for which written clearance is given. Without consent, the purchaser must not sell to buyers known to have the intention of exporting the goods. This ban shall only apply if and to the extent by which it is covered by the EU Commission's notice on agreements of minor significance. In cases where goods are delivered abroad, the purchaser shall bear any risk arising from the applicability of laws and statutes in force abroad.

15. Warranty period and statute of limitation: The warranty period shall be 12 months from the time at which the goods are delivered under clause 4 of these terms and conditions. However, the consequences set forth in clause 7 of these terms and conditions shall apply if the purchaser fails to provide notification of the defect in good time. The warranty period for goods which, in accordance with their normal usage, have been used for an edifice and have caused its defectiveness, shall be five years. All claims on the part of the purchaser – for whatever legal grounds, in particular claims for damages on account of goods being defective - shall become statute-barred after 12 months from the time of delivery.

16. Place of performance, legal venue and applicable law: The place of performance for all obligations arising from the contractual relationship shall be the place of business of the user. If the purchaser is a merchant, a legal person under public law or a special asset under public law, the legal venue for all legal disputes, including those arising as part of proceedings related to a bill of exchange or cheque, shall be the place of business of the user. The user shall also have the right to take legal action at the seat of the court having jurisdiction over the purchaser or at any other court that may have jurisdiction under national or international law. The contractual relationship shall be subject to German law. Application of the UNCITRAL sales convention (United Nations convention on the international sales of goods) shall be excluded.

17. Escape clause: Should individual provisions of these General Terms and Conditions of Sale, Delivery and Payment be or become ineffective, this shall not affect the validity of the remaining provisions.

01.10.001.26 – 02/06

Headquarter, Germany
emco Bau- und Klimatechnik GmbH & Co. KG
Breslauer Str. 34-38 · 49808 Lingen, Germany
Tel. +49 (0)591-9140-0 · Fax +49 (0)591-9140851
E-mail: klima@emco.de · www.emco-klima.com

Sales Offices

Austria / Hungary / Slovakia / Slovenia / Croatia / Serbia / Bosnia-Herzegovina
emco Bau- und Klimatechnik
Vertriebsgesellschaft mbH
Johnstraße 4, Top B3
A-1150 Wien
Tel. +43 (0) 1 - 4 93 38 80
Fax +43 (0) 1 - 4 93 38 80 17
e-mail: office@emco-klima.at

Switzerland / Liechtenstein
A. Bachmann AG
Oberfeld 19
CH-6037 Root
Tel. +41 (0) 41-455 61 20
Fax +41 (0) 41-455 61 29
e-mail: info@abach.ch

Luxembourg
Emco Bau- und Klimatechnik GmbH & Co. KG
Vertriebsbüro NRW
Breslauer Str. 34 - 38
D 49808 Lingen
Tel. +49 (0) 5 91 - 91 40 - 613
e-mail: k.h.schneider@emco.de

Belgium
AIR-G s.p.r.l.
Rue Roosevelt 20 Bte D
B 4650 Herve
Tel. +32 (0) 87 33 25 63
e-mail: jean-marie.gerson@air-g.be

France
Viviane Ghibely
14 Route de Paray
F 91320 Wissous
Tel. +33 (169) 751 628
e-mail: bureau@ghibely.fr

Poland / Estonia / Latvia / Lithuania
emco Polska Sp. z o.o.
Ul. Makowskiego 1
02-784 Warszawa
Tel. +48 (022)-741 28 05
e-mail: t.stanuch@pl.emco.de

Russia / Ukraine
Emco Bau- und Klimatechnik GmbH & Co. KG
Office 105, bld 1, 16
Polessky proezd
RUS 125367 Moscow
Tel. +49(171) 300 42 90
e-mail: i.ginsburg@emco.de

China
Emco Building Technology (Chezhou) Ltd.
Shanghai Office
Room 1502
Building 1
No. 833 South Hongmei Road
Shanghei China
Tel. +86 550 3567 500
e-mail: w.ye@emco.de

Canada
H T S
Toronto
115 Norfinch Drive
CAD Toronto ON M3N 1W8
Tel. +1 416 661 3400
e-mail: paul.povolo@hts.com

emco Bau- und Klimatechnik GmbH & Co. KG
Air conditioning technology division
Breslauer Straße 34 - 38
D - 49808 Lingen (Ems)
Germany
Tel. +49 (0) 591 9140-0
Fax +49 (0) 591 9140-851
klima@emco.de

www.emco.de

a subsidiary of